Conservation • Protection • Preservation
Combined Locks

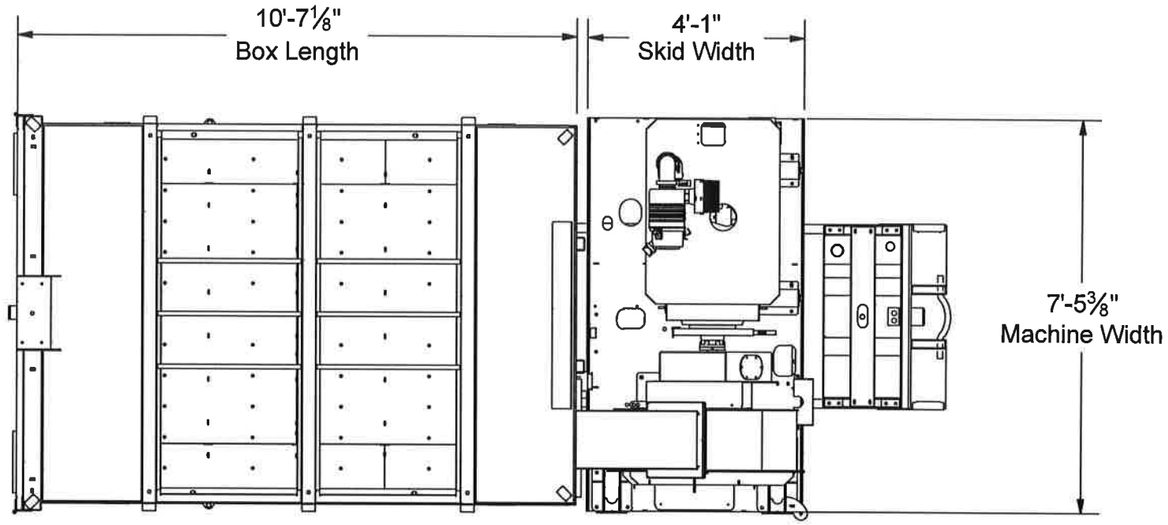
10'-7⅛"
Box Length
4'-1"
Skid Width
7'-5⅜"
Machine Width

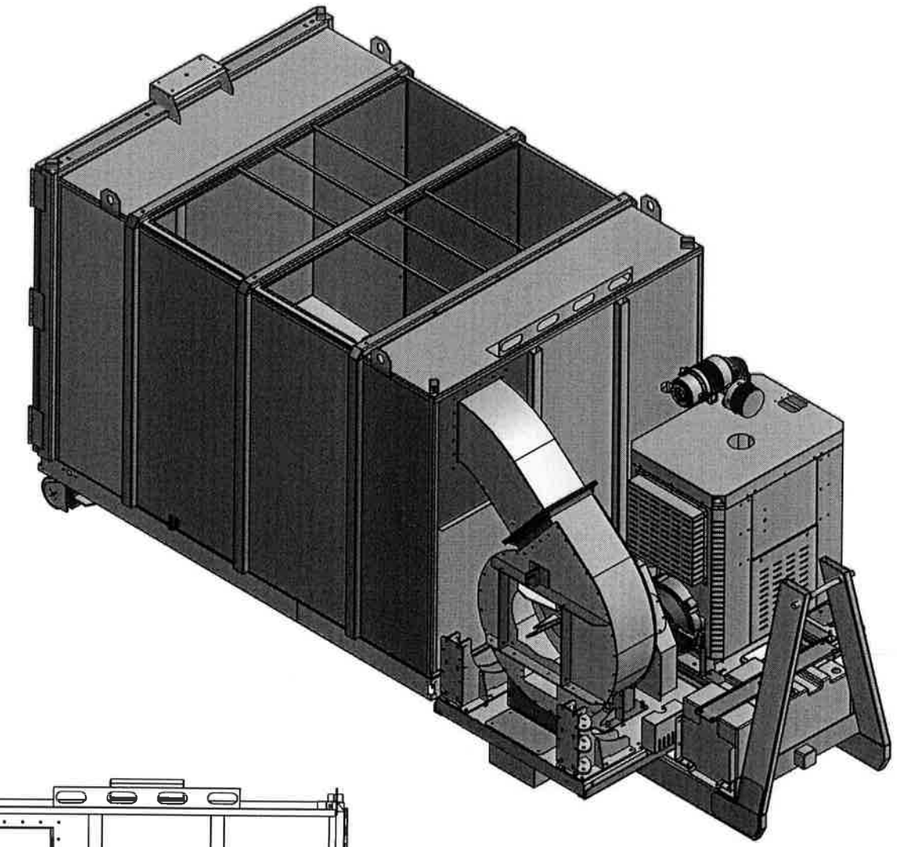

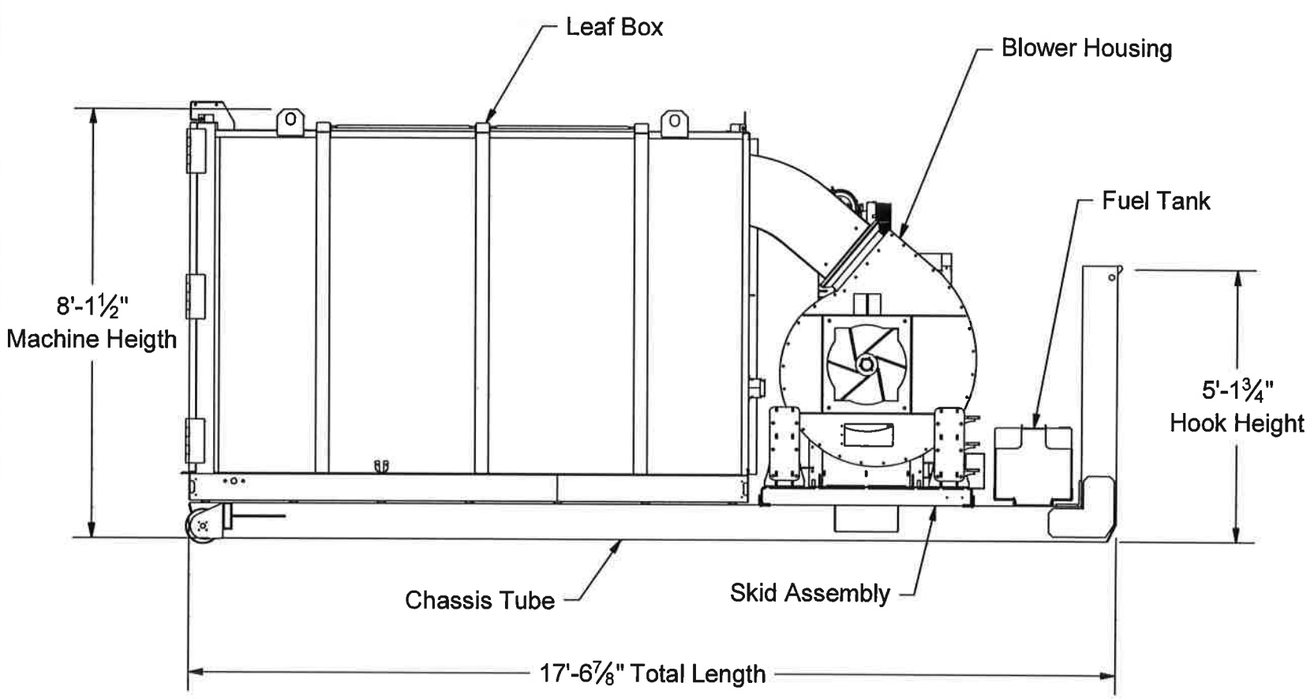
Leaf Box
Blower Housing
Fuel Tank
8'-1½"
Machine Heigth
5'-1¾"
Hook Height
Chassis Tube
Skid Assembly
17'-6⅞" Total Length

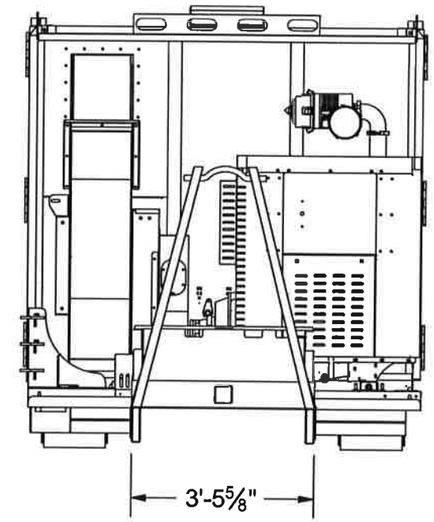
3'-5⅝"