FOUNDATION AND SLAB PLAN NOTES

1. TYPICAL FLOOR = 4" SLAB ON GRADE REINFORCED WITH NOVOMESH 950 REINFORCEMENT (5 LBS/ CUBIC YARD OF CONCRETE) UNLESS NOTED OTHERWISE
2. FINISHED FLOOR ELEVATION = 100'-0" UNLESS NOTED OTHERWISE
3. TOP OF FOUNDATION WALL ELEVATION = 100'-0" UNLESS NOTED OTHERWISE
4. TOP OF PIERS SHALL BE AT FINISHED FLOOR UNLESS NOTED OTHERWISE
5. FOUNDATION WALLS SHALL BE 1'-1" THICK UNLESS NOTED OTHERWISE
6. TOP OF EXTERIOR FOOTING ELEVATION = 3'-6" BELOW FINISHED FLOOR UNLESS NOTED OTHERWISE
7. TOP OF INTERIOR FOOTING ELEVATION = 3'-6" BELOW FINISHED FLOOR UNLESS NOTED OTHERWISE
8. WALL FOOTINGS FOR 1'-1" THICK FOUNDATION WALLS SHALL BE 2'-0" x 1'-0" x CONTINUOUS STRIPS REINFORCED WITH (3)#4 BARS UNLESS NOTED OTHERWISE
9. WALL FOOTINGS FOR 8" THICK FOUNDATION WALLS SHALL BE 1'-4" x 1'-0" x CONTINUOUS STRIPS REINFORCED WITH (3)#4 BARS UNLESS NOTED OTHERWISE
10. FOUNDATION WALL LEDGES SHALL END 2" WIDE FOR INTERIOR FOUNDATION WALLS TO MATCH WIDTH OF WALL ABOVE
11. C2 COLUMNS SHALL BE 6x6 SAWN LUMBER CONNECTED TO PIERS WITH MPB66Z SST POST BASE

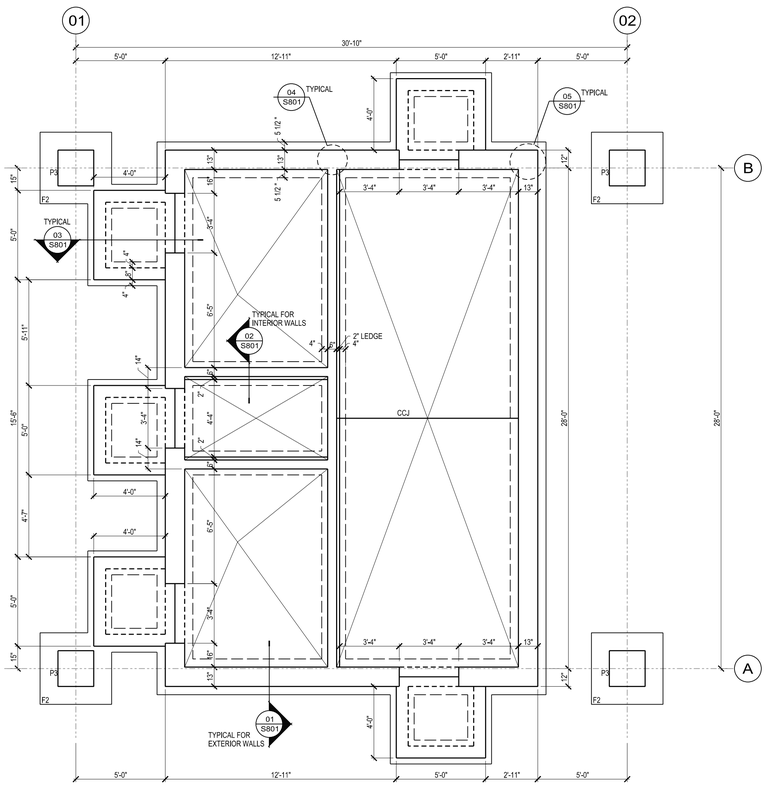

NORTH

CONCESSIONS FOUNDATION AND SLAB PLAN

SCALE: 1/8"=1'-0"

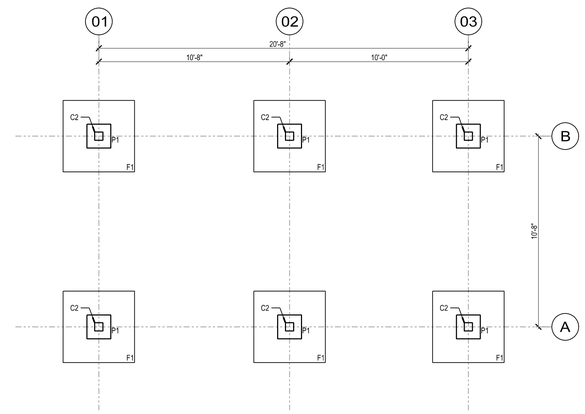

NORTH

PERGOLA FOUNDATION AND SLAB PLAN

SCALE: 1/8"=1'-0"

STATE REVIEW DRAWINGS / CONSTRUCTION DOCUMENTS

Due to electronic distribution, this drawing may not be printed to the scale indicated on the drawings. Do NOT use scale to determine dimensions or sizes.

REVISIONS

ISSUANCES

STATE BUILDING REVIEW SUBMITTAL - 05/02/2020

Copyright © 2020 Angus-Young Associates, Inc., All Rights Reserved

Angus Young
Architecture
Engineering
Interior Design
Balance in Creativity
555 South Bird Street Janesville, WI 53548-4733
Ph. 608.756.2326 Fax 608.756.0464
www.angusyoung.com

NEW PAVILION AND
SITE IMPROVEMENTS
THE GATHERING PLACE
MILTON, WI

PROJECT NUMBER 67220
APPROVED BY JJS
REVIEWED BY JJS
DRAWN BY CRS
6/1/2020 6:27:43 AM

CONCESSIONS AND PERGOLA FOUNDATION AND SLAB PLANS

S101

SCALE:
PLOTTED BY: tylera
ORIGINAL SIZE = 24" x 36"
X:\67220\acad\67220dwS101.dgn

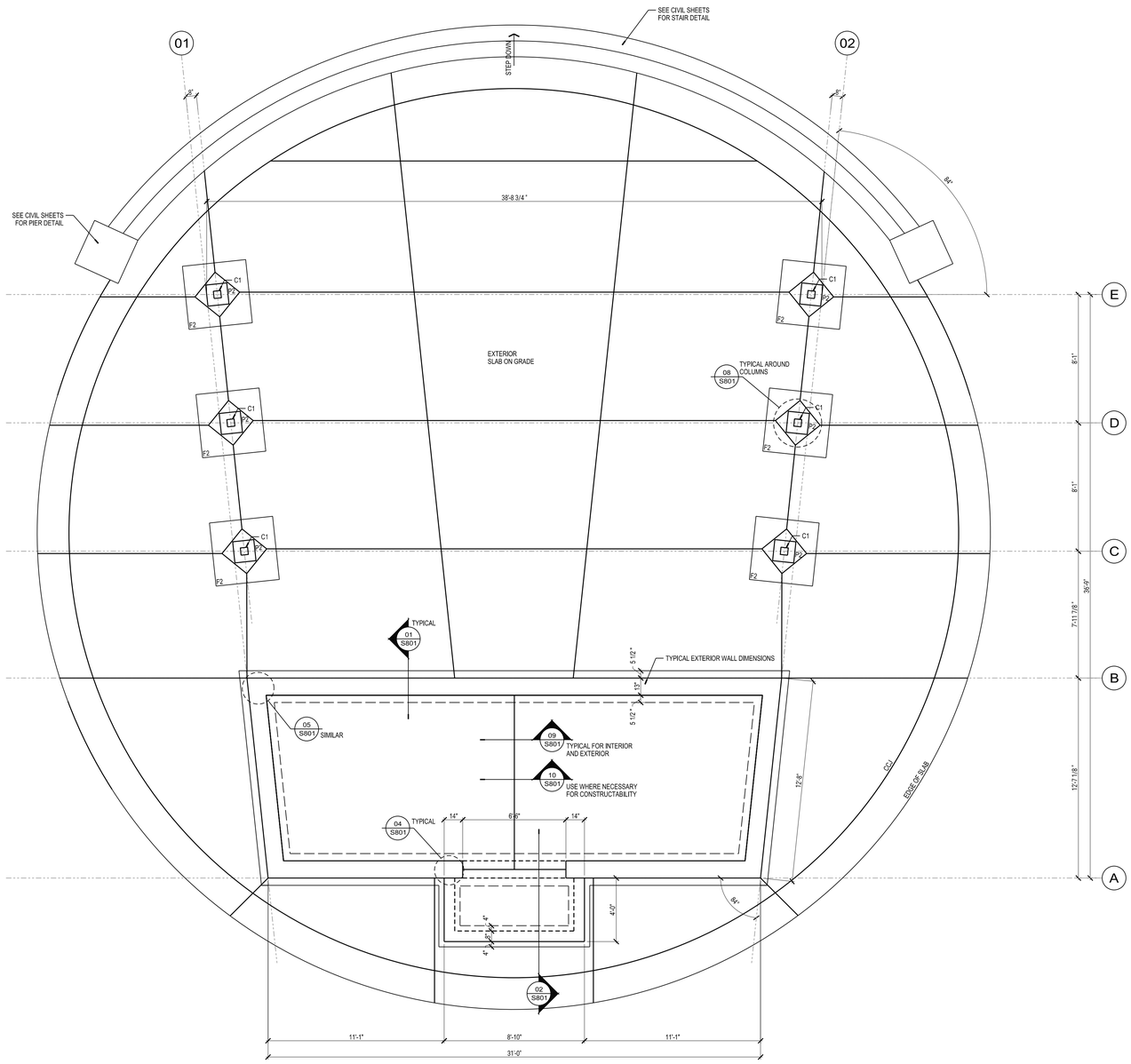

NORTH

PAVILION FLOOR PLAN

SCALE: 1/8"=1'-0"

0 4' 8' 16'

FOUNDATION AND SLAB PLAN NOTES

1. TYPICAL FLOOR = 4" SLAB ON GRADE REINFORCED WITH NOVOMESH 950 REINFORCEMENT (5 LBS/ CUBIC YARD OF CONCRETE) UNLESS NOTED OTHERWISE
2. FINISHED FLOOR ELEVATION = 100'-0" UNLESS NOTED OTHERWISE
3. TOP OF FOUNDATION WALL ELEVATION = 100'-0" UNLESS NOTED OTHERWISE
4. TOP OF PIERS SHALL BE AT FINISHED FLOOR UNLESS NOTED OTHERWISE
5. FOUNDATION WALLS SHALL BE 1'-1" THICK UNLESS NOTED OTHERWISE
6. TOP OF EXTERIOR FOOTING ELEVATION = 3'-6" BELOW FINISHED FLOOR UNLESS NOTED OTHERWISE
7. TOP OF INTERIOR FOOTING ELEVATION = 3'-6" BELOW FINISHED FLOOR UNLESS NOTED OTHERWISE
8. WALL FOOTINGS FOR 1'-1" THICK FOUNDATION WALLS SHALL BE 2'-0" x 1'-0" = CONTINUOUS STRIPS REINFORCED WITH (3)#4 BARS UNLESS NOTED OTHERWISE
9. SLAB JOINTS SHALL BE CRACK CONTROL JOINTS UNLESS NOTED OTHERWISE
10. C1 COLUMNS SHALL BE 6x6 SAWN LUMBER CONNECTED TO PIERS WITH CB66 SST COLUMN BASES

- DESIGN LOADS (CONCESSIONS):

DEAD

ROOFING =		10.3	PSF
CEILING =		2.2	PSF
MISCELLANEOUS =		4	PSF

ROOF LIVE

TRIBUTARY AREA:	<= 200	20	PSF
	200-600	INTERPOLATE	
	=> 600	12	PSF
CONCENTRATED LOAD AT ANY POINT ON PRIMARY FRAMING MEMBERS (NON-CONCURRENT WITH UNIFORM LOAD) =		400	LBS

ROOF SNOW

SNOW EXPOSURE FACTOR (C_e) =	1.0	
THERMAL FACTOR (C_t) =	1.2	
SNOW IMPORTANCE FACTOR (I_s) =	1.00	
GROUND SNOW LOAD (P_g) =	30	PSF
FLAT ROOF SNOW LOAD (P_f) =	25.2	PSF
ROOF SLOPE FACTOR (C_s) =	1.0	
SLOPED ROOF SNOW LOAD (P_s) =	25.2	PSF
UNBALANCED SNOW: WINDWARD =	7.56	PSF
LEEWARD =	25.2	PSF
LEEWARD AT SURCHARGE =	38.4	PSF
SURCHARGE DISTANCE FROM RIDGE =	3.9	FT

WIND NOMINAL (ASD) LOADS

ULTIMATE DESIGN WIND SPEED (Vult) =	115	MPH
NOMINAL DESIGN WIND SPEED (Vasd) =	90	MPH
WIND IMPORTANCE FACTOR (I_w) =	1.00	
NORTH-SOUTH WIND EXPOSURE CATEGORY =	C	
EAST-WEST WIND EXPOSURE CATEGORY =	C	
BUILDING CATEGORY:	PARTIALLY ENCLOSED	
INTERNAL PRESSURE COEFFICIENTS:	+0.18	
	-0.18	

COMPONENTS AND CLADDING LOADS:

NOTE - REFER TO ASCE 7 FOR ZONE DIAGRAMS

ZONE WIDTH (A) = 3 FT

NOTE - INTERPOLATE FOR TRIBUTARY AREAS NOT SHOWN

ROOFS:

TRIBUTARY AREA LESS THAN:	10	SQ FT
ZONE 1 =	10.2	PSF
	-17.7	PSF
ZONE 2 =	10.2	PSF
	-34.1	PSF
ZONE 3 =	10.2	PSF
	-44.6	PSF
TRIBUTARY AREA GREATER THAN:	100	SQ FT
ZONE 1 =	7.2	PSF
	-16.2	PSF
ZONE 2 =	7.2	PSF
	-23.6	PSF
ZONE 3 =	7.2	PSF
	-23.6	PSF

WINDWARD WALLS:

TRIBUTARY AREA LESS THAN:	10	SQ FT
ZONE 4 =	17.7	PSF
	-19.2	PSF
ZONE 5 =	17.7	PSF
	-23.6	PSF
TRIBUTARY AREA GREATER THAN:	500	SQ FT
ZONE 4 =	15.0	PSF
	-16.5	PSF
ZONE 5 =	15.0	PSF
	-18.4	PSF

LEEWARD AND SIDE WALLS:

TRIBUTARY AREA LESS THAN:	10	SQ FT
ZONE 4 =	17.7	PSF
	-19.2	PSF
ZONE 5 =	17.7	PSF
	-23.6	PSF
TRIBUTARY AREA GREATER THAN:	100	SQ FT
ZONE 4 =	15.0	PSF
	-16.5	PSF
ZONE 5 =	15.0	PSF
	-18.4	PSF

EARTHQUAKE

SEISMIC IMPORTANCE FACTOR, I_e =	1.00	
SEISMIC USE GROUP =	1	
SHORT PERIOD MAPPED SPECTRAL RESPONSE (S_s) =	0.097	g
1 SECOND PERIOD MAPPED SPECTRAL RESPONSE (S_1) =	0.050	g
SITE CLASS =	D	
SHORT PERIOD DESIGN SPECTRAL RESPONSE (S_{DS}) =	0.103	g
1 SECOND PERIOD DESIGN SPECTRAL RESPONSE (S_{D1}) =	0.080	g
SEISMIC DESIGN CATEGORY =	B	
NORTH-SOUTH DESIGN BASE SHEAR =	0.61	K
EAST-WEST DESIGN BASE SHEAR =	0.61	K
NORTH-SOUTH SEISMIC RESPONSE COEFFICIENT (C_s) =	4	
EAST-WEST SEISMIC RESPONSE COEFFICIENT (C_s) =	4	
NORTH-SOUTH RESPONSE MODIFICATION FACTOR (R) =	4	
EAST-WEST RESPONSE MODIFICATION FACTOR (R) =	4	
ANALYSIS PROCEDURE =	ELF	

BASIC SEISMIC FORCE RESISTING SYSTEM

NORTH-SOUTH:

SYSTEM: BEARING WALL

TYPE: ORDINARY REINFORCED CONCRETE SHEAR WALLS

EAST-WEST:

SYSTEM: BEARING WALL

TYPE: ORDINARY REINFORCED CONCRETE SHEAR WALLS

STATE REVIEW DRAWINGS / CONSTRUCTION DOCUMENTS

Due to electronic distribution, this drawing may not be printed to the scale indicated on the drawings. Do NOT use scale to determine dimensions or sizes.

REVISIONS

ISSUANCES

STATE BUILDING REVIEW SUBMITTAL - 05/02/2020

Copyright © 2020 Angus-Young Associates, Inc., All Rights Reserved

Angus Young
Architecture Engineering Interior Design
Balance in Creativity
555 South Bird Street Janesville, WI 53548-4783
Ph. 608.756.2326 Fax 608.756.0464
www.angusyoung.com

NEW PAVILION AND SITE IMPROVEMENTS
THE GATHERING PLACE
MILTON, WI

PROJECT NUMBER 6720

APPROVED BY JJS

REVIEWED BY JJS

DRAWN BY CRS

6/1/2020 6:28:18 AM

PAVILION FOUNDATION AND SLAB PLAN

S102

SCALE:

PLOTTED BY: tylera

ORIGINAL SIZE = 24" x 36"

X:\6720\cad\6720\cadS102.dgn

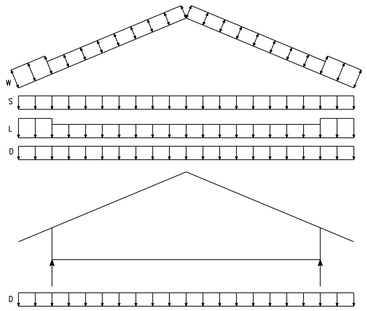

TYPE T1 - DROP BOTTOM CHORD GABLE TRUSS

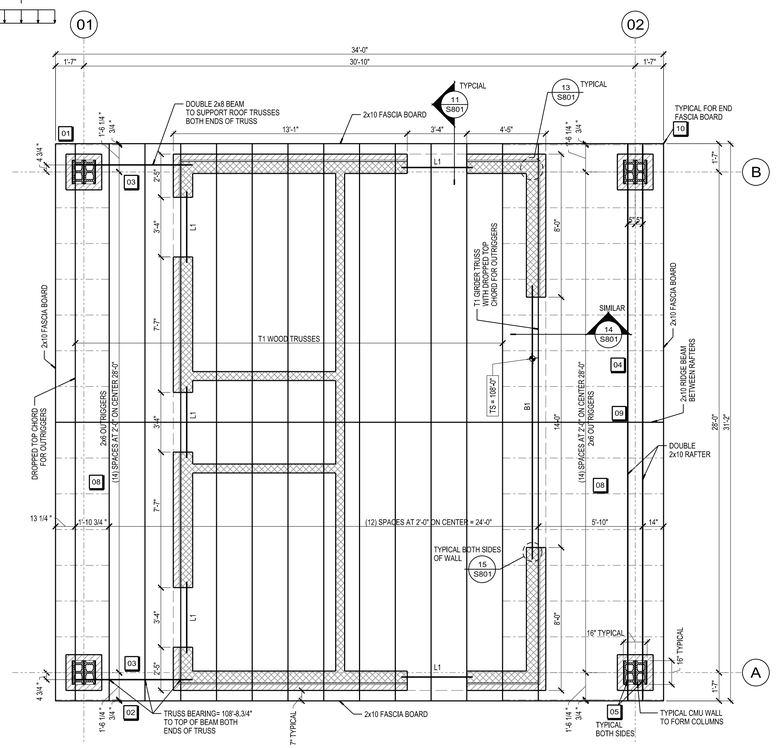

CONCESSIONS ROOF FRAMING PLAN

SCALE: 1/8"=1'-0"

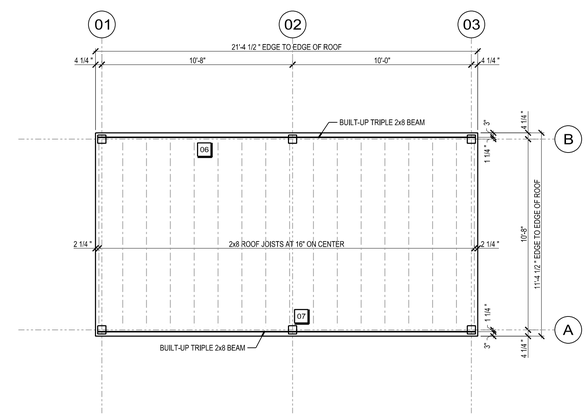

PERGOLA ROOF FRAMING PLAN

SCALE: 1/8"=1'-0"

MASONRY WALL NOTES

1. BOND BEAMS SHALL HAVE (2)#4 BARS CONTINUOUS UNLESS NOTED OTHERWISE
2. WALLS SHALL BE REINFORCED WITH #4 VERTICAL BARS AT 4'-0" O.C. UNLESS NOTED OTHERWISE
3. MASONRY WALLS SHALL BE LAID IN RUNNING BOND UNLESS NOTED OTHERWISE
4. L1 SHALL BE SINGLE COURSE BOND BEAM
5. TOP COURSE OF CMU WALL SHALL BE A SINGLE COURSE BOND BEAM

STEEL FRAMING NOTES

1. TOP OF STEEL = TOP OF STEEL BEAMS AT HIGH POINT UNLESS NOTED OTHERWISE
2. B1 SHALL BE HSS8x4x1/8 WITH 11"x1/4"xCONTINUOUS PLATE WELDED TO BOTTOM

WOOD TRUSS ROOF FRAMING NOTES

1. SHADED WALLS INDICATE BEARING WALLS
2. WOOD TRUSSES SHALL BE SPACED 2'-0" O.C. UNLESS NOTED OTHERWISE
3. TRUSS BEARING HEIGHT SHALL BE 108'-1.1/2" UNLESS NOTED OTHERWISE
4. TRUSS OVERHANG SHALL BE 7" UNLESS NOTED OTHERWISE
5. PROVIDE 2x FASCIA MATCHING TRUSS DEPTH AT END UNLESS NOTED OTHERWISE
6. WOOD TRUSSES SHALL BE FIRE-RETARDENT UNLESS NOTED OTHERWISE
7. CONNECT TRUSSES TO MASONRY WALL WITH SST HM9KT TRUSS ANCHORS UNLESS NOTED OTHERWISE

KEYNOTES

01	CONNECT FINAL (2) TRUSSES TO DOUBLE TOP PLATE WITH (3) SST H8 TIES ON EACH END
02	CONNECT TRUSSES TO BEAM WITH (2) SST H8 TIES ON EACH END
03	CONNECT BEAM TO DOUBLE TOP PLATE WITH (2) SST H8 TIES AT MASONRY WALL AND (1) HETA24 SST EMBEDDED TRUSS ANCHOR AT MASONRY COLUMN
04	CONNECT OUTRIGGERS TO RAFTER WITH SST HU26 FACE MOUNTED HANGERS CONNECTION TO TRUSSES BY MANUFACTURER
05	CONNECT RAFTERS TO BOND BEAM AT TOP OF WALL WITH DOUBLE HETA24 SST EMBEDDED TRUSS ANCHORS
06	CONNECT JOISTS TO BEAM WITH LRU267 SST JOIST HANGARS
07	CONNECT BEAMS TO COLUMNS WITH CC4.62-5.5 SST COLUMN CAPS
08	BLOCK BETWEEN OUTRIGGERS AT SUPPORT LOCATIONS AND EDGES OF ALL ROOF SHEATHING PANELS SEE DETAIL 21/S801
09	CONNECT RAFTERS WITH MSTAM24 SST STRAP ATTACHED TO TOP OF RAFTERS AND OVER THE RIDGE BEAM
10	CONNECT END FASCIA BOARD TO SIDE FASCIA BOARD WITH A SLOPED LRU287 SST HANGAR

STATE REVIEW DRAWINGS / CONSTRUCTION DOCUMENTS

Due to electronic distribution, this drawing may not be printed to the scale indicated on the drawings. Do NOT use scale to determine dimensions or sizes.

REVISIONS

ISSUANCES

STATE BUILDING REVIEW SUBMITTAL - 06/02/2020

Copyright © 2020 Angus-Young Associates, Inc., All Rights Reserved

Angus Young
Architecture
Engineering
Interior Design
Balance in Creativity
555 South Bird Street Janesville, WI 53548-4733
Ph. 608.756.2326 Fax. 608.756.0464
www.angusyoung.com

NEW PAVILION AND
SITE IMPROVEMENTS
THE GATHERING PLACE
MILTON, WI

PROJECT NUMBER 07220
APPROVED BY JJS
REVIEWED BY JJS
DRAWN BY CRS
6/1/2020 4:11:40 PM

CONCESSIONS AND PERGOLA ROOF FRAMING PLANS

S201

SCALE: 1/8"=1'-0"
PLOTTED BY: Chiesren

ORIGINAL SIZE = 24" x 36"
X:\07220\dwg\07220nS201.dgn

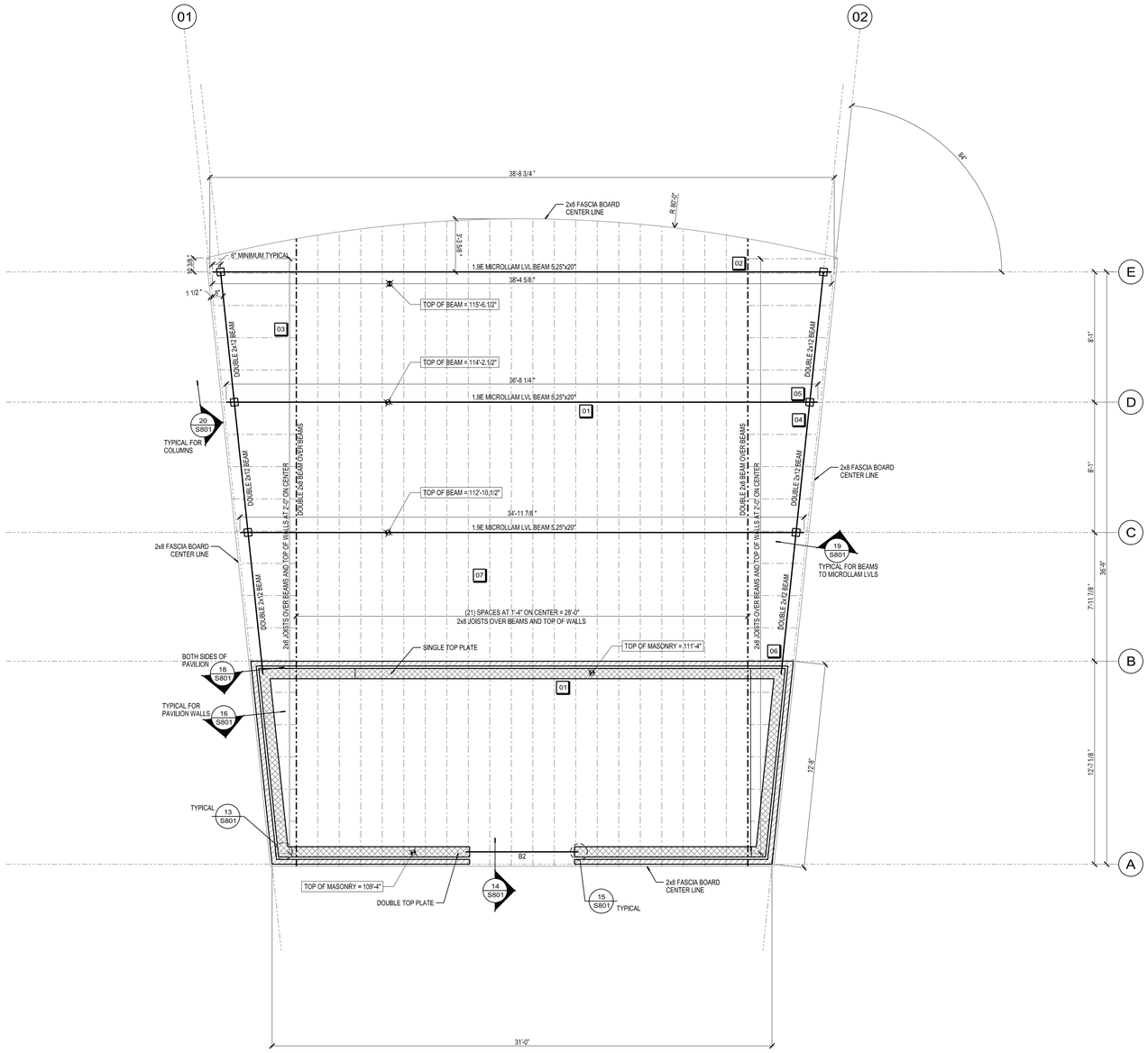

NORTH

PAVILION FLOOR PLAN

SCALE: 1/8"=1'-0"

0 4' 8' 16'

- DESIGN LOADS (PAVILION):

DEAD

ROOFING =	9.7	PSF
CEILING =	4	PSF
MISCELLANEOUS =	4	PSF

ROOF LIVE

TRIBUTARY AREA:	<= 200	20	PSF
	200-600	INTERPOLATE	
	=> 600	12	PSF

CONCENTRATED LOAD AT ANY POINT ON PRIMARY FRAMING MEMBERS (NON-CONCURRENT WITH UNIFORM LOAD) = 400 LBS

ROOF SNOW

SNOW EXPOSURE FACTOR (C_s) =	1.0	
THERMAL FACTOR (C_t) =	1.2	
SNOW IMPORTANCE FACTOR (I_s) =	1.00	
GROUND SNOW LOAD (P_g) =	30	PSF
FLAT ROOF SNOW LOAD (P_f) =	25.2	PSF
ROOF SLOPE FACTOR (C_s) =	1.0	
SLOPED ROOF SNOW LOAD (P_s) =	25.2	PSF

WIND NOMINAL (ASD) LOADS

ULTIMATE DESIGN WIND SPEED (Vult) =	115	MPH
NOMINAL DESIGN WIND SPEED (Vasd) =	90	MPH
WIND IMPORTANCE FACTOR (I_w) =	1.00	
NORTH-SOUTH WIND EXPOSURE CATEGORY =	C	
EAST-WEST WIND EXPOSURE CATEGORY =	C	
BUILDING CATEGORY :	PARTIALLY ENCLOSED	
INTERNAL PRESSURE COEFFICIENTS:	+0.55	
	-0.55	

COMPONENTS AND CLADDING LOADS:

NOTE - REFER TO ASCE 7 FOR ZONE DIAGRAMS

ZONE WIDTH (A) = 3 FT

NOTE - INTERPOLATE FOR TRIBUTARY AREAS NOT SHOWN

ROOFS:

TRIBUTARY AREA LESS THAN:	10	SQ FT
ZONE 1 =	12.8	PSF
	-24.8	PSF
ZONE 2 =	12.8	PSF
	-35.3	PSF
ZONE 3 =	12.8	PSF
	-50.4	PSF
TRIBUTARY AREA GREATER THAN:	100	SQ FT
ZONE 1 =	11.3	PSF
	-24.8	PSF
ZONE 2 =	11.3	PSF
	-26.3	PSF
ZONE 3 =	11.3	PSF
	-26.3	PSF

WINDWARD WALLS:

TRIBUTARY AREA LESS THAN:	10	SQ FT
ZONE 4 =	23.3	PSF
	-24.8	PSF
ZONE 5 =	23.0	PSF
	-29.3	PSF
TRIBUTARY AREA GREATER THAN:	500	SQ FT
ZONE 4 =	20.6	PSF
	-22.1	PSF
ZONE 5 =	20.6	PSF
	-24.0	PSF

LEEWARD AND SIDE WALLS:

TRIBUTARY AREA LESS THAN:	10	SQ FT
ZONE 4 =	23.3	PSF
	-24.8	PSF
ZONE 5 =	23.3	PSF
	-29.3	PSF
TRIBUTARY AREA GREATER THAN:	100	SQ FT
ZONE 4 =	20.6	PSF
	-22.1	PSF
ZONE 5 =	20.7	PSF
	-24.0	PSF

OPEN BUILDINGS LOAD FOR OVERHANG:

TRIBUTARY AREA LESS THAN:	9	SQ FT
ZONE 1 =	15.3	PSF
	-26.7	PSF
ZONE 2 =	22.9	PSF
	-40.8	PSF
ZONE 3 =	30.6	PSF
	-53.5	PSF

EARTHQUAKE

SEISMIC IMPORTANCE FACTOR, I_e =	1.00	
SEISMIC USE GROUP =	1	
SHORT PERIOD MAPPED SPECTRAL RESPONSE (S_s) =	0.097	g
1 SECOND PERIOD MAPPED SPECTRAL RESPONSE (S_s) =	0.050	g
SITE CLASS =	D	
SHORT PERIOD DESIGN SPECTRAL RESPONSE (S_{DS}) =	0.103	g
1 SECOND PERIOD DESIGN SPECTRAL RESPONSE (S_{D1}) =	0.080	g
SEISMIC DESIGN CATEGORY =	B	
NORTH-SOUTH DESIGN BASE SHEAR =	0.73	K
EAST-WEST DESIGN BASE SHEAR =	0.73	K
NORTH-SOUTH SEISMIC RESPONSE COEFFICIENT (C_s) =	4	
EAST-WEST SEISMIC RESPONSE COEFFICIENT (C_s) =	4	
NORTH-SOUTH RESPONSE MODIFICATION FACTOR (R) =	4	
EAST-WEST RESPONSE MODIFICATION FACTOR (R) =	4	
ANALYSIS PROCEDURE =	ELF	

BASIC SEISMIC FORCE RESISTING SYSTEM

NORTH-SOUTH:

SYSTEM: BEARING WALL

TYPE: ORDINARY REINFORCED CONCRETE SHEAR WALLS

EAST-WEST:

SYSTEM: BEARING WALL

TYPE: ORDINARY REINFORCED CONCRETE SHEAR WALLS

WOOD STUD WALL NOTES

1. ANCHOR TOP PLATE AT 2'-8" O.C. TO BOND BEAM AT TOP OF WALL

STEEL FRAMING NOTES

1. B2 SHALL BE W8X10 WITH 13"x1/4"xCONT. PLATE WELDED TO BOTTOM FOR BRICK LEDGE

MASONRY WALL NOTES

1. BOND BEAMS SHALL HAVE (2)#4 BARS CONTINUOUS UNLESS NOTED OTHERWISE
2. WALLS SHALL BE REINFORCED WITH #4 VERTICAL BARS AT 4'-0" O.C. UNLESS NOTED OTHERWISE
3. MASONRY WALLS SHALL BE 8" CMU BLOCKS LAID IN RUNNING BOND UNLESS NOTED OTHERWISE
4. TOP COURSE OF MASONRY WALL SHALL BE A SINGLE COURSE BOND BEAM
   BOND BEAM SHALL BE SLOPED TO ACHIEVE DESIRED TOP OF WALL ELEVATION WHERE NECESSARY

KEYNOTES

01 CONNECT JOISTS TO EACH SUPPORTING MEMBER WITH H2.5A SST HURRICANE TIES UNLESS NOTED OTHERWISE

02 CONNECT DOUBLE 2x8 BEAMS TO EACH SUPPORTING MEMBER WITH (2) H2.5A SST HURRICANE TIES

03 CONNECT 2x8 JOISTS TO DOUBLE 2x8 BEAMS WITH LRU28Z SST RAFTER HANGARS

04 CONNECT DOUBLE 2x12 BEAMS TO MICROLLAM BEAMS WITH BA212-2X SKRG SST TOP FLANGE HANGARS WITH 60EGREE SKEW

05 CONNECT 6x6 COLUMNS TO MICROLLAM BEAMS WITH CCQ66SDS2.5 SST COLUMN CAPS

06 CONNECT DOUBLE 2x12 BEAMS TO FACE OF CMU WALL WITH LGT2 TIEDOWNS AT WALL BOTH SIDES

07 BLOCK BETWEEN PURLINS AT SUPPORTING MEMBERS AND EDGES OF ALL ROOF SHEATHING PANELS SEE DETAIL 21/S801

- DESIGN LOADS (PERGOLA):

DEAD

ROOFING =	9.8	PSF
CEILING =	2.2	PSF
MISCELLANEOUS =	4	PSF

ROOF LIVE

TRIBUTARY AREA:	<= 200	20	PSF
	200-600	INTERPOLATE	
	=> 600	12	PSF

CONCENTRATED LOAD AT ANY POINT ON PRIMARY FRAMING MEMBERS (NON-CONCURRENT WITH UNIFORM LOAD) = 400 LBS

ROOF SNOW

SNOW EXPOSURE FACTOR (C_s) =	1.0	
THERMAL FACTOR (C_t) =	1.2	
SNOW IMPORTANCE FACTOR (I_s) =	0.80	
GROUND SNOW LOAD (P_g) =	30	PSF
FLAT ROOF SNOW LOAD (P_f) =	20.16	PSF
ROOF SLOPE FACTOR (C_s) =	1.0	
SLOPED ROOF SNOW LOAD (P_s) =	20.16	PSF

WIND NOMINAL (ASD) LOADS

ULTIMATE DESIGN WIND SPEED (Vult) =	115	MPH
NOMINAL DESIGN WIND SPEED (Vasd) =	90	MPH
WIND IMPORTANCE FACTOR (I_w) =	1.00	
NORTH-SOUTH WIND EXPOSURE CATEGORY =	C	
EAST-WEST WIND EXPOSURE CATEGORY =	C	
BUILDING CATEGORY :	PARTIALLY ENCLOSED	
INTERNAL PRESSURE COEFFICIENTS:	+0.0	
	+0.0	

COMPONENTS AND CLADDING LOADS:

NOTE - REFER TO ASCE 7 FOR ZONE DIAGRAMS

ZONE WIDTH (A) = 3 FT

OPEN BUILDINGS LOAD:

TRIBUTARY AREA LESS THAN:	9	SQ FT
ZONE 1 =	15.3	PSF
	-14.0	PSF
ZONE 2 =	22.9	PSF
	-21.7	PSF
ZONE 3 =	30.6	PSF
	-42.1	PSF

EARTHQUAKE

SEISMIC IMPORTANCE FACTOR, I_e =	1.00	
SEISMIC USE GROUP =	1	
SHORT PERIOD MAPPED SPECTRAL RESPONSE (S_s) =	0.097	g
1 SECOND PERIOD MAPPED SPECTRAL RESPONSE (S_s) =	0.050	g
SITE CLASS =	D	
SHORT PERIOD DESIGN SPECTRAL RESPONSE (S_{DS}) =	0.103	g
1 SECOND PERIOD DESIGN SPECTRAL RESPONSE (S_{D1}) =	0.080	g
SEISMIC DESIGN CATEGORY =	B	
NORTH-SOUTH DESIGN BASE SHEAR =	0.17	K
EAST-WEST DESIGN BASE SHEAR =	0.17	K
NORTH-SOUTH SEISMIC RESPONSE COEFFICIENT (C_s) =	1.5	
EAST-WEST SEISMIC RESPONSE COEFFICIENT (C_s) =	1.5	
NORTH-SOUTH RESPONSE MODIFICATION FACTOR (R) =	1.5	
EAST-WEST RESPONSE MODIFICATION FACTOR (R) =	1.5	
ANALYSIS PROCEDURE =	ELF	

BASIC SEISMIC FORCE RESISTING SYSTEM

NORTH-SOUTH:

SYSTEM: BEARING WALL

TYPE: TIMBER FRAME CANTILEVERED COLUMN SYSTEM

EAST-WEST:

SYSTEM: BEARING WALL

TYPE: TIMBER FRAME CANTILEVERED COLUMN SYSTEM

STATE REVIEW DRAWINGS / CONSTRUCTION DOCUMENTS

Due to electronic distribution, this drawing may not be printed to the scale indicated on the drawings. Do NOT use scale to determine dimensions or sizes.

REVISIONS

ISSUANCES

STATE BUILDING REVIEW SUBMITTAL - 05/02/2020

Copyright © 2020 Angus-Young Associates, Inc., All Rights Reserved

Angus Young
Architecture
Engineering
Interior Design
Balance in Creativity
555 South Bluff Street Janesville, WI 53548-4783
Ph. 608.756.3326 Fax 608.756.0464
www.angusyoung.com

NEW PAVILION AND SITE IMPROVEMENTS
THE GATHERING PLACE
MILTON, WI

PROJECT NUMBER 07220
APPROVED BY JJS
REVIEWED BY JJS
DRAWN BY CRS
6/1/2020 6:28:52 AM

PAVILION ROOF FRAMING PLAN

S202

SCALE: 1/8"=1'-0"
PLOTTED BY: tylers

ORIGINAL SIZE = 24" x 36"
X:\07220\dwg\07220xS202.dgn

STRUCTURAL GENERAL NOTES

GENERAL

- DESIGN DRAWINGS SHOW THE INTENT OF REQUIRED CONSTRUCTION AND SPECIFIC CONSTRUCTION AS NEEDED TO FACILITATE CLEAR DETAILING. FOR SPECIFIC CONDITIONS NOT SHOWN, THE CONTRACTOR SHALL PROVIDE DETAILS OF CONSTRUCTION SIMILAR TO THOSE SHOWN.
- THE FOLLOWING NOTES APPLY TO THE PLANS AND/OR SPECIFICATIONS UNLESS NOTED OTHERWISE. IN THE CASE OF CONFLICT WITH PLANS AND/OR SPECIFICATIONS, THE MORE RESTRICTIVE REQUIREMENT SHALL APPLY.
- CONTRACTOR SHALL BECOME FAMILIAR WITH EACH DRAWING AND DETAIL CONTAINED IN THE DRAWING SET AND REPORT ANY ERRORS, OMISSIONS, DISCREPANCIES, OR DETAILS NOT REFERENCED FOR INSTRUCTIONS FROM THE DESIGN PROFESSIONAL.
- VERIFY AND COORDINATE EXISTING CONDITIONS, DIMENSIONS, AND CONSTRUCTION IN PROGRESS WITH THE SHOP DRAWINGS FOR THE VARIOUS MATERIALS AND BUILDING COMPONENTS PRIOR TO SUBMITTAL, ORDERING ANY MATERIAL, OR COMMENCEMENT OF ANY WORK. ALL DIMENSIONAL DISCREPANCIES SHALL BE BROUGHT TO THE ATTENTION OF THE DESIGN PROFESSIONAL.
- VERIFY AND COORDINATE WITH ALL CONTRACTORS THE SIZE AND LOCATION OF ALL ARCHITECTURAL AND MECHANICAL APPURTENANCES AND OPENINGS.
- CONSTRUCTION PRACTICE, MEANS AND METHODS, AND JOBSITE SAFETY SHALL REMAIN THE SOLE RESPONSIBILITY OF THE CONTRACTOR.
- CONTRACTOR SHALL REFER TO ARCHITECTURAL, MECHANICAL, ELECTRICAL, PLUMBING, STRUCTURAL, AND OTHER DISCIPLINE DRAWINGS TO COORDINATE ALL MISCELLANEOUS WORK PROVIDED FOR OTHER DISCIPLINES. THE CONTRACTOR IS RESPONSIBLE FOR DETERMINING ALL DIVISION OF MATERIALS AND LABOR FOR THE WORK.
- ALL WORK SHALL BE PERFORMED IN COMPLIANCE WITH THE FEDERAL OCCUPATIONAL SAFETY AND HEALTH ADMINISTRATION (OSHA) AND ALL FEDERAL, STATE, AND LOCAL CODES AND ORDINANCES AS THEY PERTAIN TO THIS PROJECT.
- THE CONTRACTOR SHALL PROVIDE TEMPORARY BRACING, SUPPORTS, SHORING, ETC. UNTIL PERMANENT BRACING AND SUPPORT SYSTEMS ARE IN PLACE AND FUNCTIONAL. THE DESIGN, ADEQUACY, AND SAFETY OF TEMPORARY BRACING, SUPPORTS, SHORING, ETC., SHALL REMAIN THE SOLE RESPONSIBILITY OF THE CONTRACTOR.
- STRUCTURAL FRAMING AND CONNECTIONS HAVE BEEN DESIGNED FOR THE FINAL COMPLETED CONDITION AND HAVE NOT BEEN INVESTIGATED FOR POTENTIAL LOADINGS ENCOUNTERED DURING CONSTRUCTION. INVESTIGATION OF THE FRAMING AND CONNECTIONS FOR ADEQUACY DURING CONSTRUCTION SHALL REMAIN THE SOLE RESPONSIBILITY OF THE CONTRACTOR.
- SUBSTITUTIONS FOR PROPRIETARY STRUCTURAL PRODUCTS DESIGNATED ON THE DRAWINGS SHALL BE APPROVED BY THE DESIGN PROFESSIONAL. THE CONTRACTOR SHALL BE RESPONSIBLE FOR NECESSARY INFORMATION USED TO DETERMINE ADEQUACY OF PROPOSED SUBSTITUTIONS INCLUDING STRUCTURAL CALCULATIONS IF NECESSARY.

SUBMITTAL REVIEW

- SUBMITTALS ARE ALL ITEMS REQUESTED TO BE SUBMITTED FOR REVIEW AND INCLUDE STRUCTURAL CALCULATIONS AND SHOP DRAWINGS. SHOP DRAWINGS INCLUDE BOTH ERECTION AND PRODUCTION DRAWINGS.
- SUBMITTALS SHALL BE PROVIDED FOR REVIEW AND MARKED "FOR APPROVAL".
- PRIOR TO SUBMITTAL TO THE DESIGN PROFESSIONAL, THE CONTRACTOR SHALL:
  1) REVIEW EACH SUBMISSION FOR COMPLIANCE WITH THE CONTRACT DOCUMENTS;
  2) REVIEW EACH SUBMISSION FOR CONFORMANCE WITH THE MEANS, METHODS, TECHNIQUES, SEQUENCES, OPERATIONS OF CONSTRUCTION, AND SAFETY PRECAUTIONS AND PROGRAMS INCENDENTAL THERETO, ALL OF WHICH ARE THE SOLE RESPONSIBILITY OF THE CONTRACTOR;
  3) IDENTIFY ANY VARIATIONS FROM THE CONTRACT DOCUMENTS,
  4) APPROVE AND STAMP COMPLIANT SUBMISSIONS THUS. NON COMPLIANT SUBMITTALS SHALL BE REVISED UNTIL COMPLIANT.
- ALLOW TEN (10) WORKING DAYS FROM THE DATE OF SUBMISSION FOR THE DESIGN PROFESSIONAL'S SUBMITTAL REVIEW. ALLOW MORE FOR LARGE SUBMITTALS.
- SUBMITTALS SHALL BE REVIEWED AND MARKED "PROCESSED" OR "APPROVED" BY ALL REVIEWING PARTIES PRIOR TO THE START OF FABRICATION.
- REVIEW BY THE DESIGN PROFESSIONAL IS TO CONFIRM THAT THE DETAILED WORK (WHEN COMPLETE) CONFORMS TO THE DESIGN INTENT AND IS ABLE TO PERFORM AS AN INTEGRAL PART OF THE COMPLETED BUILDING SYSTEM SHOWN ON THE CONTRACT DOCUMENTS. A COMPLETED REVIEW BY THE DESIGN PROFESSIONAL IS NOT AN APPROVAL OF CHANGES SHOWN IN THE SUBMITTAL, HAS NOT CHECKED DIMENSIONS SHOWN IN THE SUBMITTAL, AND DOES NOT RELIEVE THE CONTRACTOR OF THE RESPONSIBILITIES FOR CORRECTNESS OF THE DETAILS, ERRORS, AND CONFORMANCE WITH THE CONTRACT.
- FINAL STRUCTURAL DESIGN CALCULATIONS AND SHOP DRAWINGS SHALL BE PROVIDED FOR RECORD PURPOSES AND MARKED "FOR CONSTRUCTION" PRIOR TO INSTALLATION.
- CONSTRUCTION ELEMENTS DESIGNATED AS STRUCTURAL COMPONENTS ARE DESIGNED BY PARTIES OTHER THAN THE DESIGN PROFESSIONAL OF RECORD AND HAVE THE ADDITIONAL REQUIREMENTS OF SUBMITTAL TO AUTHORITIES HAVING JURISDICTION. SUBMIT STRUCTURAL COMPONENT FINAL STRUCTURAL DESIGN CALCULATIONS, SHOP DRAWINGS, AND THE REQUIRED SUBMITTAL FEE TO THE DESIGN PROFESSIONAL FOR REVIEW, SIGNATURE, AND SUBMITTAL TO THE AUTHORITY HAVING JURISDICTION.
- STRUCTURAL COMPONENT SUBMITTALS TO THE AUTHORITY HAVING JURISDICTION ARE REQUIRED TO BE COMPLETED PRIOR TO INSTALLATION OR FINES COULD BE IMPOSED BY THE AUTHORITY HAVING JURISDICTION. ALL FINES WILL BE BACKCHARGED TO THE CONTRACTOR.
- STRUCTURAL COMPONENT DESIGNS SHALL MATCH THE GEOMETRY SHOWN ON THE DESIGN DRAWINGS TO MAINTAIN THE OVERALL STRUCTURAL DESIGN CONCEPT AND ASSUMPTIONS USED IN THE DESIGN OF CONNECTING PORTIONS OF THE BUILDING. ANY AND ALL DEVIATIONS SHALL BE APPROVED IN WRITING BY THE DESIGN PROFESSIONAL OF RECORD PRIOR TO IMPLEMENTATION. ADDITIONAL COSTS TO EITHER THE DESIGN PROFESSIONAL OF RECORD OR OTHER CONTRACTORS FOR UNAPPROVED CHANGES SHALL BE THE RESPONSIBILITY OF THE COMPONENT SUPPLIER.

EARTHWORK

- CONTACT PROPER AUTHORITIES TO LOCATE EXISTING UNDERGROUND UTILITIES PRIOR TO EXCAVATION.
- A LICENSED GEOTECHNICAL ENGINEER ACCEPTABLE TO THE OWNER SHALL BE RETAINED BY THE CONTRACTOR TO INSPECT, TEST, APPROVE, DOCUMENT, AND REPORT ALL BEARING CONDITIONS AND COMPACTED FILL INSTALLATIONS PRIOR TO CONCRETE PLACEMENT. FOUNDATION CONSTRUCTION MAY BE ADJUSTED BY THE DESIGN PROFESSIONAL IF REQUIRED BY THE GEOTECHNICAL ENGINEER. CONSULT THE DESIGN PROFESSIONAL BEFORE PROCEEDING.
- CONTRACTOR SHALL COORDINATE AND SCHEDULE WHEN THE GEOTECHNICAL ENGINEER IS TO BE ON SITE. NO FOOTINGS OR FOUNDATIONS SHALL BE PLACED WITHOUT PRIOR APPROVAL FROM THE GEOTECHINCAL ENGINEER.
- IF EXCAVATION INDICATES A SOIL BEARING CAPACITY LESS THAN DESIGN CAPACITY AT FOOTING DEPTH, CONSULT THE DESIGN PROFESSIONAL BEFORE PROCEEDING.
- FOOTINGS SHALL BE CAST ON UNDISTURBED SOIL, COMPACTED FILL, OR CONTROLLED LOW STRENGTH MATERIAL (CLSM).
- COMPACT ALL SUBGRADE BELOW FOOTINGS PRIOR TO CONCRETE PLACEMENT.
- HOLES, TRENCHES, OR DISTURBANCES IN THE SOIL SHALL NOT BE ALLOWED WITHIN THE VOLUME DESCRIBED BY 45 DEGREE LINES SLOPING FROM THE BOTTOM EDGE OF THE FOOTING. IF SUCH ARE REQUIRED, CONSULT THE DESIGN PROFESSIONAL BEFORE PROCEEDING.
- BOTTOM OF FOOTINGS ADJACENT TO EXISTING FOUNDATIONS SHALL BE AT THE SAME ELEVATION AS THE EXISTING FOUNDATION UNLESS A 2:1 MAXIMUM SLOPE (HORIZONTAL TO VERTICAL) IS MAINTAINED BETWEEN BOTTOM OF FOOTINGS.
- DO NOT PLACE UNDERGROUND UTILITES OR PIPES BELOW FOOTINGS WITHOUT CONSULTING THE DESIGN PROFESSIONAL BEFORE PROCEEDING.
- TOPSOIL OR UNACCEPTABLE SOIL BELOW SLABS ON GRADE SHALL BE REMOVED. SUBGRADE UNDER SLABS SHALL BE AS RECOMMENDED IN THE PROJECT MANUAL.
- COMPACT ALL SUBGRADE MATERIAL PRIOR TO PLACMENT OF ANY FILL. REMOVE LOOSE MATERIAL AND DEBRIS THAT CANNOT BE ADEQUATELY COMPACTED.
- BACKFILL AGAINST ANY WALLS OR CONSTRUCTION SHALL NOT BE PLACED UNLESS THE WALLS ARE ADEQUATELY BRACED TO WITHSTAND THE LOADS IMPOSED DUE TO THE BACKFILLING OPERATION.
- DESIGN, FURNISH, AND INSTALL ALL TEMPORARY SHEETING AND SHORING NECESSARY TO MAINTAIN THE EXCAVATION AND PROTECT SURROUNDING STRUCTURES AND UTILITIES.
- PROVIDE ANY DEWATERING REQUIRED DURING EXCAVATION AND CONSTRUCTION.
- PROVIDE MINIMUM 24 INCHES OF WASHED STONE OVER ALL DRAIN TILES AND 4 INCHES BELOW.

CONCRETE

- CONTRACTOR SHALL PROVIDE SUBMITTALS FOR THE CONCRETE.
- CONCRETE WORK SHALL CONFORM TO THE ACI MANUAL OF STANDARD PRACTICE INCLUDING BUT NOT LIMITED TO ACI 301("SPECIFICATIONS FOR STRUCTURAL CONCRETE") ACI 305("HOT WEATHER CONCRETING"), AND ACI 306("COLD WEATHER CONCRETING"). CONCRETE DETAILING SHALL CONFORM TO ACI SP-66("ACI DETAILING MANUAL").
- A CERTIFIED TESTING AGENCY ACCEPTABLE TO THE OWNER SHALL BE RETAINED BY THE CONTRACTOR TO INSPECT, TEST, APPROVE, DOCUMENT, AND REPORT ON ALL CONCRETE PROPERTIES.
- CONTRACTOR SHALL NOTIFY DESIGN PROFESSIONAL, BUILDING INSPECTOR, AND TESTING AGENCY AT LEAST 24 HOURS PRIOR TO PLACING CONCRETE.
- SLABS ON GRADE SHALL BE CAST ALLOWING A SUFFICIENT NUMBER OF JOINTS TO ADEQUATELY CONTROL SHRINKAGE CRACKING. GENERALLY, JOINTS SHALL OCCUR ON COLUMN CENTERLINES. JOINTS SHALL BE SPACED IN SUCH A WAY THAT THE LENGTH TO WIDTH RATIO OF UN-JOINTED SLAB PORTION SHALL NEVER BE GREATER THAN 2. SPACING SHOULD BE APPROXIMATELY 2.5 x SLAB THICKNESS (CONVERTED TO FEET) WITH A MAXIMUM MAXIMUM SPACING BETWEEN JOINTS OF 15'-0".
- SLABS ON GRADE SHALL HAVE THE FOLLOWING FINISH UNLESS NOTED OTHERWISE:
  - EXTERIOR SLABS - BROOM FINISH
  - INTERIOR SLABS - TROWEL FINISH
  - SLABS TO RECEIVE BONDED TOPPINGS - SCRATCH FINISH
  - SLABS TO RECEIVE TILE BY THIN OR THICK SET METHOD - FINE BROOM FINISH
- SLABS ON GRADE SHALL HAVE A 6 MIL VAPOR RETARDER BELOW SLAB UNLESS NOTED OTHERWISE
- WELDED WIRE REINFORCEMENT IN SLABS ON GRADE SHALL BE PLACED WITHIN 2" FROM THE TOP OF THE SLAB. CHAIRS SHALL BE USED. LIFTING THE WIRE DURING CONCRETE PLACEMENT IS NOT PERMITTED.
- SLOPE SLAB ON GRADE 1/4" PER FOOT TO DRAINS UNLESS NOTED OTHERWISE.
- SLOPE SLAB ON GRADE AT OVERHEAD DOORS 1/2" IN DEPTH OF DOOR JAMB AWAY FROM BUILDING.
- SAW-CUTTING SHALL BE DONE AS SOON AS THE CONCRETE HAS HARDENED SUFFICIENTLY TO PREVENT THE AGGREGATE FROM BEING DISLODGED BY THE SAW AND SHALL BE COMPLETED BEFORE SHRINKAGE STRESSES BECOME SUFFICIENT TO PRODUCE CRACKING, WITHIN 16 HOURS MAXIMUM OF THE INITIAL CASTING OPERATION.
- ALLOW AT LEAST 24 HOURS BEFORE POURING ADJACENT WALL SECTIONS BETWEEN CONSTRUCTION JOINTS.
- MAX LENGTH OF POUR TO BE 50 FEET UNLESS CRACK INDUCERS ARE USED.
- ALL REINFORCEMENT SHALL BE SECURELY HELD IN POSITION BY SUITABLE ACCESSORIES PRIOR TO CONCRETE PLACEMENT EXCEPT AS NOTED OR SPECIFIED.
- CONSTRUCTION JOINTS IN BEAMS, JOISTS, OR SLABS SHALL BE LOCATED BETWEEN THE 1/4 POINT AND CENTERLINE OF SPAN UNLESS NOTED OTHERWISE OR AS DIRECTED BY THE DESIGN PROFESSIONAL.
- BOTTOM OF EXTERIOR FOOTINGS SHALL BE A MINIMUM OF 4'-0" BELOW FINISHED GRADE UNLESS NOTED OTHERWISE
- FOOTINGS SHALL BE CENTERED BELOW WALLS, PIERS, AND COLUMNS ABOVE UNLESS NOTED OTHERWISE.
- SLOPE EXTERIOR STOOPS 1/4" PER FOOT AWAY FROM BUILDING.
- TOP OF FOUNDATION WALL SHALL BE DROPPED 8" AT DOOR THRESHOLDS FOR FLOOR SLAB CAP. WIDTH OF CAP SHALL BE EQUAL TO WIDTH OF ROUGH OPENING.
- WHERE REINFORCING IS CALLED FOR IN PORTIONS OF THE BUILDING, IT SHALL BE DUPLICATED IN SIMILAR PORTIONS OF THE BUILDING.
- DOWELS INTO FOUNDATION SHALL BE SAME NUMBER AND SIZE AS WALL/PIER/COLUMN VERTICAL REINFORCING.
- WHERE FOOTINGS ARE CONSTRUCTED ON OR ADJACENT TO CONTINUOUS STRIP FOOTINGS, DOWEL INTO EXISTING 9" MIN. AND GROUT SOLID.
- BARS SPLICES SHALL BE LAPPED WITH CLASS B SPLICE LENGTHS UNLESS NOTED OTHERWISE. LAP WELDED WIRE REINFORCEMENT 6 INCHES.
- HORIZONTAL REINFORCING IN CONCRETE WALLS SHALL BE CONTINUOUS
- VERTICAL REINFORCING IN CONCRETE WALLS SHALL END 2" FROM THE TOP OF THE WALL
- PROVIDE (2) #4 BARS AS STIRRUP CARRY BARS WHERE TOP STEEL IS UNAVAILABLE TO SUPPORT STIRRUPS.
- PROVIDE CORNER BARS OF SAME SIZE AND SPACING AS HORIZONTAL BARS AT WALL CORNERS. BARS SHALL BE 40 BAR DIAMETERS IN LENGTH EACH WAY.
- PROVIDE INTERSECTION BARS OF SAME SIZE AND SPACING AS HORIZONTAL BARS AT WALL INTERSECTIONS. BARS SHALL BE 40 BAR DIAMETERS IN LENGTH WITH STANDARD HOOKS EACH WAY AT INTERSECTING WALL.
- DO NOT CUT OR PLACE HOLES IN CONCRETE SLABS, BEAMS, COLUMNS, OR WALLS WITHOUT PRIOR APPROVAL OF THE DESIGN PROFESSIONAL.
- WALL OR SLAB PENETRATIONS SHALL HAVE (2) #4 BARS DIAGONALLY AT CORNERS OF OPENINGS CENTERED IN SLAB: EXTEND 1'-0" BEYOND THE EDGE OF THE PENETRATION IN EACH DIRECTION.
- SLABS SHALL HAVE #4 BARS DIAGONALLY AT INSIDE CORNERS OF WALLS, PIERS, AND FOUNDATION DROPS FOR SLAB CAPS UNLESS A CONTROL JOINT IS PROVIDED AT THE CORNER.
- PIPES AND CONDUITS EMBEDDED IN OR PASSING THROUGH STRUCTURAL MEMBERS MUST BE APPROVED BY THE DESIGN PROFESSIONAL. PIPE AND CONDUIT EMBEDDED IN CONCRETE SHALL NOT BE LARGER IN OUTSIDE DIAMETER AT ITS WIDEST POINT OR FITTING THAN 2 INCHES OR 1/3 OF THE THICKNESS OF THE SLAB, BEAM, OR WALL; AND SHALL BE LOCATED AND PLACED AS SUCH:
  1. NOT CLOSER THAN THREE DIAMETERS ON CENTER.
  2. CONCRETE COVER IS NOT LESS THAN 2 INCHES.
  3. NO REINFORCING SHALL BE DISPLACED.
- WHERE AN APPROVED PIPE OR CONDUIT EXTENDS THROUGH A BEAM, PROVIDE ONE ADDITIONAL STIRRUP ON EACH SIDE OF THE OPENING.
- COORDINATE AND VERIFY SIZE AND LOCATION OF ALL OPENINGS, SLEEVES, CHASES, CONDUITS, DEPRESSED AREAS, FLOOR FINISHES, FILLS, ANCHORS, STONE AND MASONRY INSERTS, HANGERS, CURBS, AND OTHER MISCELLANEOUS ITEMS BEFORE PLACING CONCRETE.
- CALCIUM CHLORIDE OR ADMIXTURES CONTAINING CALCIUM CHLORIDE SHALL NOT BE USED.
- A MINIMUM OF 4 CONCRETE CYLINDERS SHALL BE TAKEN FOR EACH CONCRETE PORTION TESTED.

CONCRETE REINFORCMENT

- CONTRACTOR SHALL PROVIDE SUBMITTALS FOR THE CONCRETE REINFORCEMENT.

MASONRY

- CONTRACTOR SHALL PROVIDE SUBMITTALS FOR THE MASONRY.
- MASONRY WORK SHALL CONFORM TO ACI 530.1/ASCE 6/TMS 602("SPECIFICATION FOR MASONRY STRUCTURES") INCLUDING BUT NOT LIMITED TO THE HOT AND COLD WEATHER REQUIREMENTS.
- ANCHOR VENEERS TO BACKUP WALLS WITH TIES AT MAXIMUM SPACINGS OF 2'-0"x2'-0".
- VERTICAL REINFORCING SHALL BE TERMINATED WITH HOOKED BARS AT THE TOP OF WALL/COLUMN AND LAP SPLICED WITH DOWELS AT THE FOUNDATION.
- DOWELS INTO FOUNDATION SHALL BE SAME NUMBER AND SIZE AS WALL/PIER/COLUMN REINFORCING.
- CONCRETE MASONRY WALLS SHALL BE REINFORCED WITH WIRE IN HORIZONTAL JOINTS, AT 16" O.C. VERTICALLY FOR EXTERIOR WALLS AND 24" O.C. VERTICALLY FOR INTERIOR WALLS, USE GALVANIZED NO. 9 GAGE TRUSS TYPE JOINT REINFORCEMENT AS A MINIMUM. SEE DRAWINGS FOR ADDITIONAL REINFORCEMENT.
- MASONRY SHALL BE ANCHORED TO SUPPORTING BEAMS AND COLUMNS.
- BARS SPLICES SHALL BE LAPPED 48 BAR DIAMETERS UNLESS NOTED OTHERWISE.
- PROVIDE BOND BEAM CORNER BARS OF SAME SIZE AND SPACING AS HORIZONTAL BARS AT WALL CORNERS. BARS SHALL BE 48 BAR DIAMETERS IN LENGTH EACH WAY.
- PROVIDE BOND BEAM INTERSECTION BARS OF SAME SIZE AND SPACING AS HORIZONTAL BARS AT WALL INTERSECTIONS. BARS SHALL BE 48 BAR DIAMETERS IN LENGTH WITH STANDARD HOOKS EACH WAY AT INTERSECTING WALL.
- VERTICAL CELLS TO BE GROUTED SHALL HAVE VERTICAL ALIGNMENT SUFFICIENT TO MAINTAIN A CLEAR, UNOBSTRUCTED CONTINUOUS CELL NOT LESS THAN 3" x 4" AND FACE SHELLS AND WEBS SHALL BE FULLY BEDDED TO PREVENT LEAKAGE OF GROUT.
- CLEANOUT OPENINGS FOR INSPECTION SHALL BE PROVIDED PRIOR TO GROUTING IF THE LIFT EXCEEDS FOUR FEET, THE GROUTING SHALL BE COMPLETED IN FOUR FOOT LIFTS AND VIBRATED. WAIT 15 TO 60 MINUTES BEFORE POURING NEXT FOUR FOOT LIFTS AND VIBRATING 12" TO 18" INTO PRECEDING LIFT.
- CONTROL JOINTS IN MASONRY WALLS TO BE LOCATED AT:
  - A) MAXIMUM OF 20'-0" FROM CORNERS.
  - B) MAXIMUM OF 40'-O" ON CENTER.
  - C) CHANGES IN WALL HEIGHT OR THICKNESS.
  - D) CHASES AND RECESSES FOR PIPING, COLUMNS, AND FIXTURES.
  - E) ABUTMENT OF WALLS TO COLUMNS.
- PROVIDE (1)FULL HEIGHT #5 VERTICAL BAR AT ALL DOOR JAMBS, WINDOW JAMBS, MECHANICAL OPENINGS, CONTROL JOINTS, OR OTHER MASONRY DISCONTINUITIES UNLESS NOTED OTHERWISE. BAR SHALL BE CONTINUOUS WITHOUT INTERFERING WITH LINTEL BEARING. FULLY GROUT REINFORCED CELL.
- REINFORCE AND FULLY GROUT CELLS MINIMUM 16" WIDE BY FULL HEIGHT WITH (1)#5 VERTICAL BAR IN EACH CELL WHERE STRUCTURAL MEMBERS BEAR ON CONCRETE MASONRY UNLESS NOTED OTHERWISE.
- IN MASONRY WALLS, NO CHASE, RISERS, CONDUIT OR TOOTHING OF MASONRY SHALL OCCUR WITHIN 1'-6" OF BEARING OR LOAD CONCENTRATION.
- BEAMS AND LINTELS SHALL HAVE MINIMUM 8" BEARING LENGTH AT EACH END.
- PROVIDE 3/8" BEARING PLATES WITH (2) 3/8" DIAMETER x 4" HEADED STUD ANCHORS FOR BEAMS AND JOISTS BEARING ON MASONRY UNLESS NOTED OTHERWISE.
- BOND BEAMS, PILASTERS, AND ANY CELLS CONTAINING EMBEDMENT, REINFORCING STEEL, ANCHORS, ETC. SHALL BE FULLY GROUTED. PLACE REINFORCING BEFORE GROUTING.
- FULLY GROUT AND PARGE MASONRY CONTACTING EARTH.
- EXTEND NON-BEARING WALLS TO WITHIN 2" OF FLOOR ABOVE. PROVIDE LATERAL SUPPORT OF WALL AT INTERMEDIATE SUPPORTS TO RESIST A HORIZONTAL FORCE OF 200 LBS./FT ACTING PERPENDICULAR TO THE WALL. SUBMIT DETAILS TO THE DESIGN PROFESSIONAL PRIOR TO CONSTRUCTION.
- DO NOT USE CALCIUM CHLORIDE OR ADMIXTURES CONTAINING CALCIUM CHLORIDE.

MASONRY REINFORCEMENT

- CONTRACTOR SHALL PROVIDE SUBMITTALS FOR THE MASONRY REINFORCEMENT.
- BOND BEAMS SHALL BE REINFORCED WITH (2)#5 BARS MINIMUM UNLESS NOTED OTHERWISE.
- PROVIDE STANDARD HOOK AT ENDS OF BARS IN BOND BEAMS.
- ALL REINFORCING SHALL BE SUPPORTED BY ACCESSORIES TO PROPERLY LOCATE AND STABILIZE REINFORCING PRIOR TO GROUT PLACEMENT.

STRUCTURAL STEEL

- CONTRACTOR SHALL PROVIDE SUBMITTALS FOR THE STRUCTURAL STEEL.
- WELDS SHALL BE AWS PRE-QUALIFIED, MADE WITH A E70xx ELECTRODE, AND SHALL BE PERFORMED BY WELDERS, AWS CERTIFIED FOR WELDS MADE.
- FABRICATOR SHALL BE RESPONSIBLE FOR DESIGN AND DETAILING OF FRAME CONNECTIONS FOR THE FORCES NOTED.
- ALL STRUCTURAL AND MISCELLANEOUS STEEL EXPOSED TO WEATHER SHALL HAVE CONTINUOUS SEAL WELDS AT ALL JOINTS, IN ADDITION TO STRENGTH WELDS.
- CLEAN, PREPARE, AND SHOP PRIME STRUCTURAL STEEL MEMBERS IN ACCORDANCE WITH S.S.P.C. STANDARDS SP-1 AND SP-6.
- ALL STEEL REMAINING EXPOSED TO VIEW SHALL BE FABRICATED AND ERECTED IN ACCORDANCE WITH THE AISC CODE OF STANDARD PRACTICE SECTION PERTAINING TO ARCHITECTURALLY EXPOSED STRUCTURAL STEEL, WITHOUT GAPS OR OPEN JOINTS

WOOD FRAMING

- ALL STRUCTURAL FRAMING LUMBER, PLYWOOD, AND FABRICATED WOOD PRODUCTS SHALL HAVE A MOISTURE CONTENT NOT EXCEEDING 19% AT THE TIME OF INSTALLATION. JOBSITE STORAGE OF ALL WOOD PRODUCTS SHALL PROTECT WOOD MATERIALS FROM DAMAGE DUE TO THE ELEMENTS. NO WARPED OR WEATHER DAMAGED LUMBER, ENGINEERED WOOD, OR WOOD TRUSSES SHALL BE USED.
- FASTENERS SHALL BE PLACED ACCORDING TO BUILDING CODE FASTENING SCHEDULES UNLESS NOTED ON PLAN.
- SHEATHING AND GYPSUM SHALL BE NAILED OR SCREWED, ADHESIVES SHALL NOT BE USED IN PLACE OF NAILS OR SCREWS.
- TOE NAILING AT CONNECTIONS IS NOT PERMITTED.
- FASTEN ROOF SHEATHING PER A.P.A. FASTENER RECOMMENDATIONS FOR SPECIFIED LOADING AND THE FOLLOWING MINIMUM SPACINGS:
  - A) 8d AT 6" ON CENTER AT ALL SUPPORTED EDGES
  - B) 8d AT 12" ON CENTER AT INTERMEDIATE SUPPORTS
- FASTEN WALL SHEATHING PER A.P.A. FASTENER RECOMMENDATIONS FOR SPECIFIED LOADING AND THE FOLLOWING MINIMUM SPACINGS:
  - A) 8d AT 6" ON CENTER AT ALL SUPPORTED EDGES
  - B) 8d AT 12" ON CENTER AT INTERMEDIATE SUPPORTS
- WALL BEARING MEMBERS SHALL HAVE 1/2" AIR SPACE AROUND SIDES AND ENDS OF BEAMS.
- CONTRACTOR SHALL COORDINATE THE LOCATION OF ALL SHEAR WALL ANCHORS.
- WOOD CONNECTORS SHALL BE MANUFACTURED BY SIMPSON STRONG-TIE COMPANY UNLESS APPROVED IN WRITING BY THE DESIGN PROFESSIONAL. THE CONTRACTOR SHALL SUBMIT A LISTING OF THE CONNECTORS AND FASTENERS TO BE USED ALONG WITH NECESSARY PRODUCT DATA FOR REVIEW.
- DOUBLE 2x TOP PLATES SHALL BE SCREWED TOGETHER WITH (2) #12 WOOD SCREWS x 2.1/2" LONG AT 12" O.C. AND (4) WOOD SCREWS AT LOCATIONS OF ROOF STRUCTURAL ANCHORS UNLESS NOTED OTHERWISE.

WOOD TRUSSES

- CONTRACTOR SHALL PROVIDE SUBMITTALS FOR THE WOOD TRUSSES.
- WOOD TRUSSES ARE STRUCTURAL COMPONENTS AND HAVE THE ADDITIONAL REQUIREMENTS REQUIRED AS SUCH.
- THE CONTRACTOR IS RESPONSIBLE FOR ALL TEMPORARY BRACING OF TRUSSES DURING HANDLING AND ERECTION AND PERMANENT BRACING PER THE MANUFACTURER'S RECOMMENDATIONS, THE REQUIREMENTS OF THE TRUSS PLATE INSTITUTE, AND OSHA REGULATIONS.
- TRUSS MANUFACTURERS SHALL PROVIDE ALL TRUSS-TO-TRUSS CONNECTIONS.
- ANCHORAGE TO SUPPORT SHALL BE SECURED USING ANCHORS WITH A MINIMUM UPLIFT CAPACITY OF 600 LBS. AT EACH TRUSS UNLESS NOTED OTHERWISE.
- CONNECT NON-BEARING WALLS TO THE UNDERSIDE OF TRUSSES WITH SLOTTED ANCHOR CONNECTIONS TO ALLOW FOR TRUSS DEFLECTION.
- CONTRACTOR SHALL FULLY BLOCK ALL BEARING ENDS OF TRUSSES FROM BEARING PLATE TO ROOF SHEATHING IN EVERY OTHER TRUSS SPACE, FASTEN ROOF SHEATHING TO BLOCKING AT 6" O.C. WITH 12d NAILS, DRILL 3" HOLES AT 6" O.C. TO VENT SOFFIT.
- USE JOIST HANGERS DESIGNED FOR GIVEN MEMBER SIZE FOR SUPPORT WHEN FRAMING INTO SIDES OF OTHER MEMBERS.
- BRIDGE AND BLOCK TRUSSES IN ACCORDANCE WITH THE MANUFACTURER'S AND THE TRUSS PLATE INSTITUTE'S REQUIREMENTS

MISCELLANEOUS

- PROVISIONS SHALL BE TAKEN TO ASSURE NON-STRUCTURAL COMPONENTS ARE NOT DISTORTED OR DAMAGED BY DEFLECTION OF THE STRUCTURE. INCLUDE DEFLECTION TRACK AT ALL INTERIOR NON-LOAD BEARING STUD WALLS.
- EDGE OF ROOF FLASHINGS SHALL ALLOW RAINWATER TO PASS THROUGH.
- POWDER-ACTUATED FASTENERS SHALL FOLLOW ANSI A10.3 SPECIFICATIONS
- ADHESIVE ANCHORS SHALL BE SIMPSON STRONG TIE ACRYLIC-TIE ADHESIVE UNLESS NOTED OTHERWISE OR APPROVED BY THE DESIGN PROFESSIONAL.

STRUCTURAL DESIGN SPECIFICATIONS

- THE DESIGN PROFESSIONAL WAIVES ANY AND ALL RESPONSIBILITY AND LIABILITY FOR PROBLEMS ARISING FROM FAILURE TO FOLLOW THESE PLANS, SPECIFICATIONS, AND THE DESIGN INTENT THEY CONVEY, OR FOR PROBLEMS ARISING FROM OTHERS' FAILURE TO OBTAIN AND/OR FOLLOW THE DESIGN PROFESSIONAL'S GUIDANCE WITH RESPECT TO ANY ERRORS, OMISSIONS, INCONSISTENCIES, AMBIGUITIES, OR CONFLICTS WHICH ARE ALLEGED.
- DESIGN, FABRICATION, AND ERECTION SHALL BE IN ACCORDANCE WITH LOCAL, STATE, AND FEDERAL REGULATIONS APPLICABLE TO WORK AND PROJECT LOCATION
- BUILDING ANALYSIS AND DESIGN WERE AND SHALL BE BASED ON THE STATE OF WISCONSIN BUILDING CODE AS AMENDED TO DATE.
- EDITION AND DATE OF REFERENCED STANDARDS SHALL BE AS LISTED IN THE BUILDING CODE.
- THE LATERAL SUPPORT SYSTEM INCORPORATES A ROOF DIAPHRAGM.
- DEFLECTION DUE TO WIND LOADS SHALL BE CALCULATED BASED ON 0.7 TIMES THE NOMINAL COMPONENTS AND CLADDING LOADS.
- STRUCTURAL COMPONENT DESIGN NOTES:
  - DRIFTING AND SLIDING SNOW SHALL BE CONSIDERED IF REQUIRED
  - WORST CASE LOADING COMBINATIONS SHALL BE USED
  - UNBALANCED LOADING SHALL BE CONSIDERED
- FOOTINGS WERE DESIGNED USING A NET SOIL BEARING CAPACITY OF 3000 PSF .
- THE DESIGN SOIL BEARING CAPACITY WAS BASED ON A SOILS REPORT PREPARED BY C.G.C., INC. OF MADISON, WI ON 10/18/2019. THE CONTRACTOR SHALL REFERENCE THE SOILS REPORT AND CONFORM TO THE REQUIREMENTS STATED WITHIN.
- DESIGN AND FABRICATION OF WELDS SHALL BE IN ACCORDANCE WITH THE AWS STRUCTURAL WELDING CODE AND THE AISC MANUAL OF STANDARD PRACTICE.
- DESIGN, FABRICATION, AND ERECTION OF COLD FORMED STEEL MEMBERS SHALL BE IN ACCORDANCE WITH THE AISI DESIGN SPECIFICATIONS AND MANUAL OF STANDARD PRACTICE.
- DESIGN, FABRICATION, AND ERECTION OF HOT FORMED STEEL MEMBERS SHALL BE IN ACCORDANCE WITH THE AISC DESIGN SPECIFICATIONS AND MANUAL OF STANDARD PRACTICE.
- DESIGN, FABRICATION, AND ERECTION OF CONCRETE MASONRY SHALL BE IN ACCORDANCE WITH ACI 530("BUILDING CODE REQUIREMENTS FOR CONCRETE MASONRY STRUCTURES").
- DESIGN, FABRICATION, AND ERECTION OF CONCRETE SHALL BE IN ACCORDANCE WITH ACI 318("BUILDING CODE REQUIREMENTS FOR STRUCTURAL CONCRETE").
- MINIMUM 28 DAY CONCRETE CYLINDER STRENGTH SHALL BE:

MUD SLABS	500 PSI
FOOTINGS	3000 PSI
FOUNDATION WALLS	4000 PSI
PIERS	4000 PSI
SLABS ON GRADE	4000 PSI

- EXTERIOR EXPOSED CONCRETE SHALL BE AIR ENTRAINED.
- REINFORCING STEEL SHALL CONFORM TO ASTM A615 GRADE 60.
- WELDED WIRE REINFORCEMENT SHALL CONFORM TO ASTM A185.
- CONCRETE MASONRY UNITS SHALL CONFORM TO ASTM C 90 NORMAL WEIGHT UNITS.
- MINIMUM COMPRESSIVE STRENGTH OF REINFORCED AND UN-REINFORCED CONCRETE MASONRY UNIT CONSTRUCTION SHALL BE: f'_m = 1500 PSI.
- CLAY MASONRY BUILDING (COMMON) BRICK SHALL CONFORM TO ASTM C62 GRADE SW.
- CLAY MASONRY HOLLOW BRICK SHALL CONFORM TO ASTM C652 GRADE SW TYPE HBS CLASS H40V.
- MINIMUM COMPRESSIVE STRENGTH OF CLAY MASONRY BRICK CONSTRUCTION SHALL BE f'_m = 1394 PSI.
- MORTAR FOR ALL REINFORCED LOAD BEARING MASONRY WALLS SHALL CONFORM TO ASTM C270 TYPE M.
- MASONRY GROUT SHALL CONFORM TO ASTM C476 MINIMUM COMPRESSIVE STRENGTH: f'c = 3000 PSI
- STRUCTURAL STEEL
  - W-SHAPE BEAMS AND COLUMNS SHALL CONFORM TO ASTM A992, Fy = 50ksi
  - PLATES, ANGLES, AND CHANNELS SHALL CONFORM TO ASTM A36, Fy = 36ksi
  - COLD FORMED TUBING SHALL CONFORM TO ASTM A500, GRADE B, Fy = 42ksi FOR ROUNDS AND Fy=46ksi FOR SHAPES
  - HOT FORMED TUBING SHALL CONFORM TO ASTM A501, Fy = 36ksi
- LIMIT DEFLECTION ON TRUSSES TO L/ 360 FOR LIVE LOAD AND L/240 FOR TOTAL LOAD FROM THE HORIZONTAL OR STRAIGHT CONDITION.
- LIMIT DEFLECTION ON EXTERIOR WALL COMPONENTS TO L/600 AT VENEER LOCATIONS.
- DESIGN, FABRICATION, AND ERECTION OF ALL WOOD FRAMING SHALL BE IN ACCORDANCE WITH THE N.F.P.A. DESIGN SPECIFICATIONS AND MANUAL OF STANDARD PRACTICE.
- WOOD STRUCTURAL MEMBERS SHALL BE SPRUCE-PINE-FIR SPECIES AND GRADE STAMPED WITH A MINIMUM GRADE OF #2 OR BETTER.
- DESIGN, FABRICATION, AND ERECTION OF ALL WOOD STRUCTURAL SHEATHING PANELS SHALL BE IN ACCORDANCE WITH THE APA-ENGINEERED WOOD ASSOCIATION'S PLYWOOD DESIGN SPECIFICATION.
- ROOF SHEATHING SHALL BE APA RATED SHEATHING EXTERIOR, 19/32" THICKNESS WITH A MINIMUM SPAN RATING OF 40/20 UNLESS NOTED OTHERWISE.
- WALL SHEATHING SHALL BE APA RATED SHEATHING EXPOSURE 1, 15/32" THICKNESS WITH A MINIMUM SPAN RATING OF 32/16 UNLESS NOTED OTHERWISE.
- FLOOR SHEATHING SHALL BE APA RATED SHEATHING EXPOSURE 1, 23/32" THICKNESS WITH A MINIMUM SPAN RATING OF 48/24 UNLESS NOTED OTHERWISE.
- DESIGN, FABRICATION, AND ERECTION OF METAL-PLATE-CONNECTED WOOD TRUSSES SHALL BE IN ACCORDANCE WITH THE T.P.I. DESIGN SPECIFICATIONS AND MANUAL OF STANDARD PRACTICE.
- METAL-PLATE-CONNECTED WOOD TRUSSES SHALL BE DESIGNED BY THE SUPPLIER AND SHALL INCLUDE THE FOLLOWING MINIMUM SUPERIMPOSED LOADS:
  - TOP CHORD:
    - DEAD LOAD (D) = 7.6 PSF
    - LIVE LOAD (L) = AS LISTED ABOVE
    - SNOW LOAD (S) = AS LISTED ABOVE
    - WIND LOAD (W) = AS LISTED ABOVE
  - BOTTOM CHORD:
    - DEAD LOAD (D) = 2.2 PSF
    - LIVE LOAD (L) = 4 PSF

CONCRETE SPREAD FOOTING SCHEDULE

				F1	F2
MARK				F1	F2
FUTURE DESIGN LOAD			ASD	0 KIPS	0 KIPS
FUTURE DESIGN LOAD			LRFD	0 KIPS	0 KIPS
LOCATION/ COMPONENT				PER PLAN	PER PLAN
FOOTING	SIZE (N-S x E-W) x DEPTH			4'-0" x 4'-0" x 12"	4'-0" x 4'-0" x 12"
FOOTING	REINFORCEMENT	LONG DIRECTION	QUANTITY AND SIZE	(6) #4 BARS TOP AND BOTTOM	UNREINFORCED
FOOTING	REINFORCEMENT	LONG DIRECTION	SPACING AND LOCATION	EQUALLY SPACED	EQUALLY SPACED
FOOTING	REINFORCEMENT	SHORT DIRECTION	QUANTITY AND SIZE	(6) #4 BARS TOP AND BOTTOM	UNREINFORCED
FOOTING	REINFORCEMENT	SHORT DIRECTION	SPACING AND LOCATION	EQUALLY SPACED	EQUALLY SPACED
FOOTING	DETAIL			06/S801	06/S801 (SIM.)
FOOTING	NOTES				

CONCRETE PIER SCHEDULE

			P1	P2	P3
MARK			P1	P2	P3
FUTURE DESIGN LOAD		ASD	0 KIPS	0 KIPS	0 KIPS
FUTURE DESIGN LOAD		LRFD	0 KIPS	0 KIPS	0 KIPS
LOCATION/ COMPONENT			PER PLAN	PER PLAN	PER PLAN
PIER	SETTING PLATE LxWxT (INCHES)		NONE	NONE	NONE
PIER	SIZE (N-S x E-W)		16" x 16"	16" x 16"	24" x 24"
PIER	REINFORCEMENT	VERTICAL BAR QUANTITY AND SIZE	(8)- #4 BARS	UNREINFORCED	UNREINFORCED
PIER	REINFORCEMENT	HORIZONTAL TIE SIZE	# 4	NONE	NONE
PIER	REINFORCEMENT	HORIZONTAL TIE SPACING	(1) SPACES AT 3" O.C. REMAINING AT 8" O.C.	N/A	N/A
PIER	REINFORCEMENT	DOWEL QUANTITY AND SIZE (WITH STANDARD HOOKS)	(8)- #4 BARS	(4)- #4 BARS	(4)- #4 BARS
PIER	REINFORCEMENT	DETAIL	07/S801	07/S801	07/S801
PIER	REINFORCEMENT	NOTES			

STATE REVIEW DRAWINGS / CONSTRUCTION DOCUMENTS

Due to electronic distribution, this drawing may not be printed to the scale indicated on the drawings. Do NOT use scale to determine dimensions or sizes.

REVISIONS

ISSUANCES

STATE BUILDING REVIEW SUBMITTAL - 05/02/2020

Copyright © 2020 Angus-Young Associates, Inc., All Rights Reserved

Angus Young
Balance in Creativity
Architecture
Engineering
Interior Design
555 South River Street Janesville, WI 53548-4783
Ph: 608.756.2326 Fx: 608.756.0464
www.angusyoung.com

NEW PAVILION AND SITE IMPROVEMENTS
THE GATHERING PLACE
MILTON, WI

PROJECT NUMBER 67220
APPROVED BY JJS
REVIEWED BY JJS
DRAWN BY CRS
6/1/2020 6:29:20 AM

GENERAL NOTES AND SPECIFICATIONS

S301

Due to electronic distribution, this drawing may not be printed to the scale indicated on the drawings. Do NOT use scale to determine dimensions or sizes.

ORIGINAL SIZE = 24" x 36"
X:\67220\cad\67220s301.dgn
SCALE: 1/8"=1'-0"
PLOTTED BY: tylera

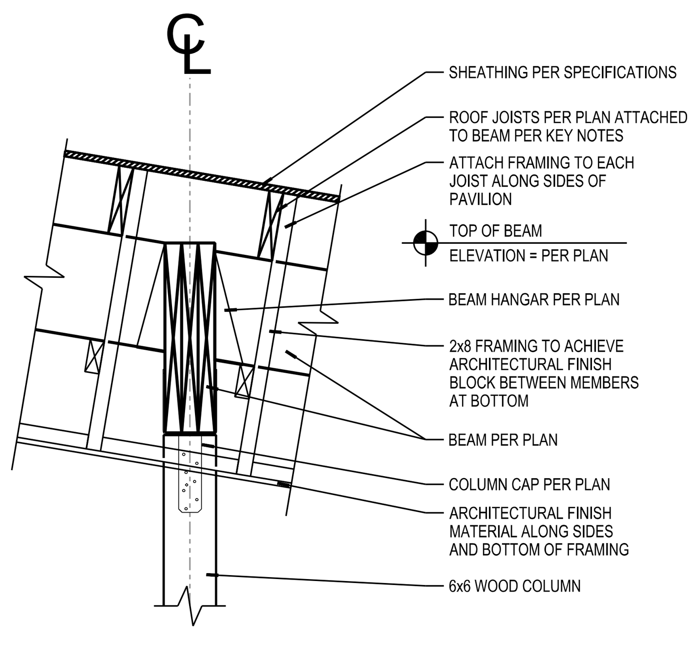

20 PAVILION BEAM TO COLUMN CONNECTION
S801 SCALE: 3/4"=1'-0"

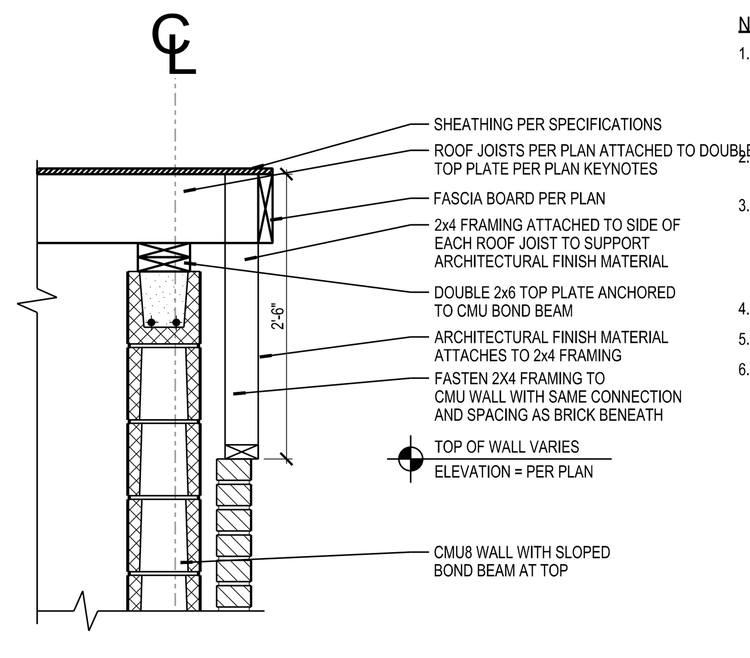

16 PAVILION TOP OF WALL CONNECTION
S801 SCALE: 3/4"=1'-0"

NOTES:

1. GROUTED LINTEL (THROUGH) BLOCKS SHALL TYP. EXTEND A MINIMUM OF 8" BEYOND FACE OF OPENING EACH SIDE UNLESS NOTED OTHERWISE. THE FIRST TWO VERTICAL CELLS ON EACH SIDE OF THE OPENING SHALL BE GROUTED AND CONTAIN (2) #5 VERTICAL EACH FACE. THE FIRST CELLS EACH SIDE OF THE OPENING SHALL BE GROUTED TO LINTEL BEARING LEVEL. THE SECOND CELL SHALL BE GROUTED TO ROOF LEVEL.
2. CONCRETE PRECAST LINTELS CAN BE SUBSTITUTED UPON APPROVAL BY THE ARCHITECT. TOP BARS SHALL BE PROVIDED EQUAL TO THE SCHEDULED BOTTOM BARS. SEE "PRECAST" DETAIL BELOW.
3. GROUTED LINTEL (THROUGH) BLOCKS SHALL EXTEND A MINIMUM OF 8" BEYOND FACE OF OPENING EACH SIDE UNLESS NOTED OTHERWISE. THE FIRST TWO VERTICAL CELLS ON EACH SIDE OF THE OPENING SHALL BE GROUTED AND CONTAIN (2) #6 VERTICAL EACH FACE. NOTE: THE FIRST CELLS EACH SIDE OF THE OPENING SHALL BE GROUTED TO LINTEL LEVEL. THE SECOND CELL SHALL BE GROUTED TO ROOF LEVEL.
4. USE L3.1/3x3.1/3x5/16 FOR BRICK LEDGE UNLESS NOTED OTHERWISE.
5. LINTELS SCHEDULED AS 16" HIGH MAY BE TYPE "B" OR "C" AS DETAILED BELOW.
6. CONSTRUCTION JOINT SHALL NOT BE LOCATED WITHIN WIDTH OF OPENING. NOR SHALL IT BE LOCATED WITHIN 24" OF OPENING ON BOTH SIDES.

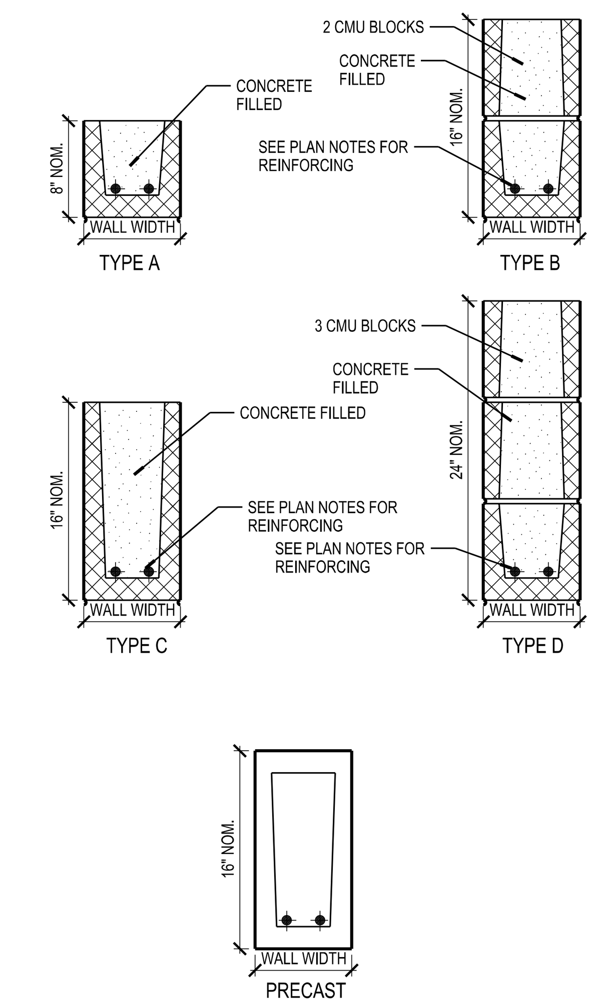

11 CMU LINTEL DETAILS
S801 SCALE: 1"=1'-0"

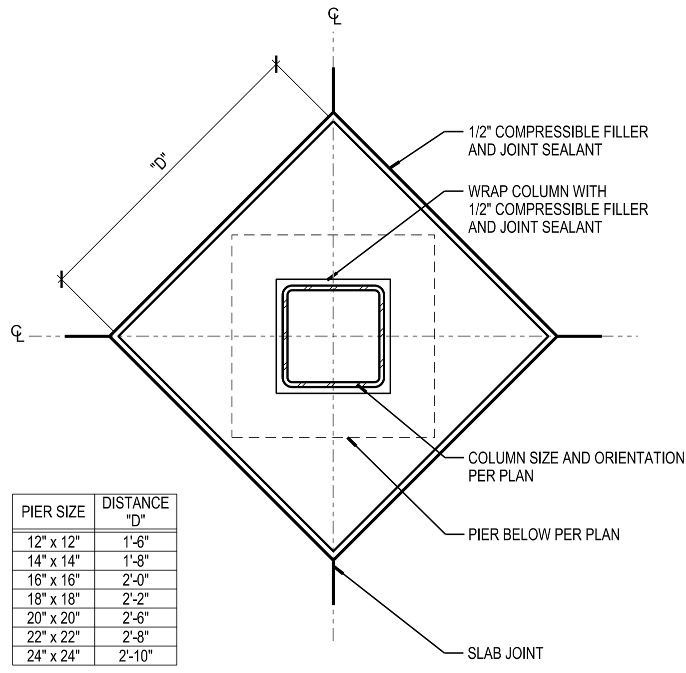

PIER SIZE	DISTANCE "D"
12" x 12"	1'-6"
14" x 14"	1'-8"
16" x 16"	2'-0"
18" x 18"	2'-2"
20" x 20"	2'-6"
22" x 22"	2'-8"
24" x 24"	2'-10"

08 SLAB ISOLATION JOINT AT COLUMN
S801 SCALE: 1"=1'-0"

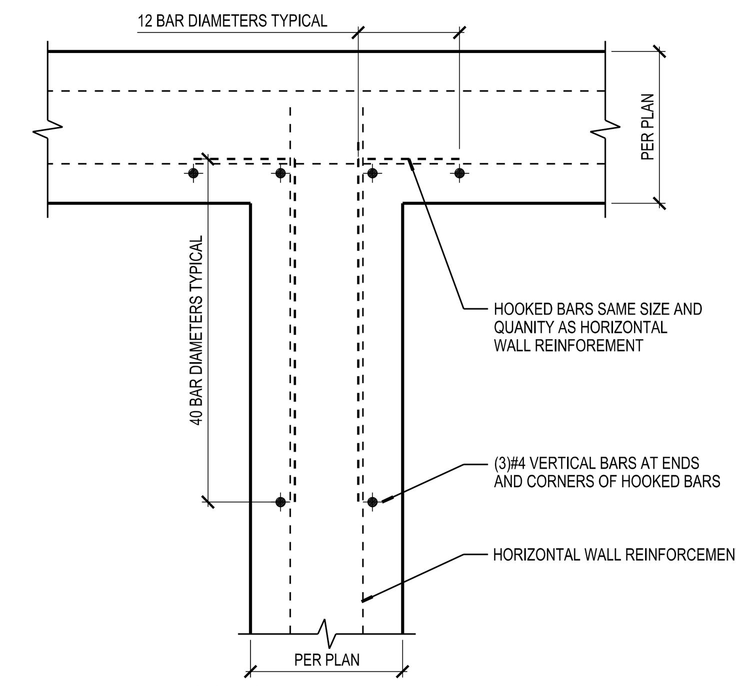

04 CONCRETE FOUNDATION INTERSECTION PLAN
S801 SCALE: 1"=1'-0"

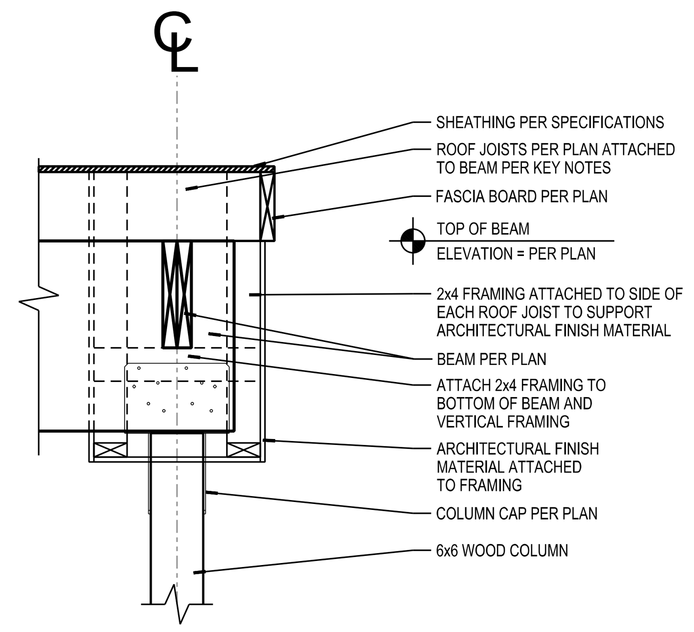

19 PAVILION BEAM TO BEAM CONNECTION
S801 SCALE: 3/4"=1'-0"

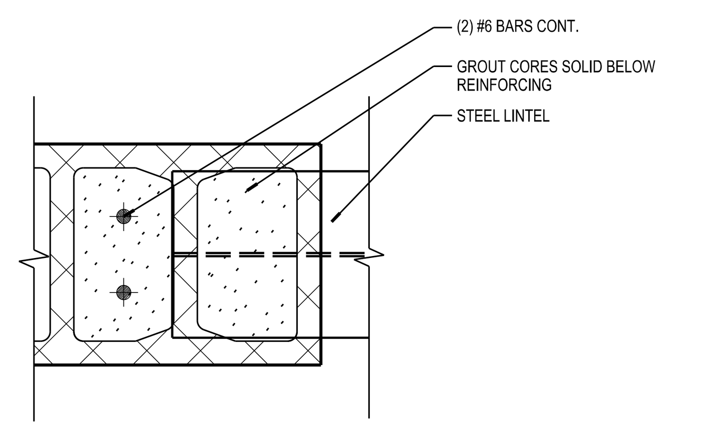

15 LINTEL BEARING DETAIL
S801 SCALE: 1"=1'-0"

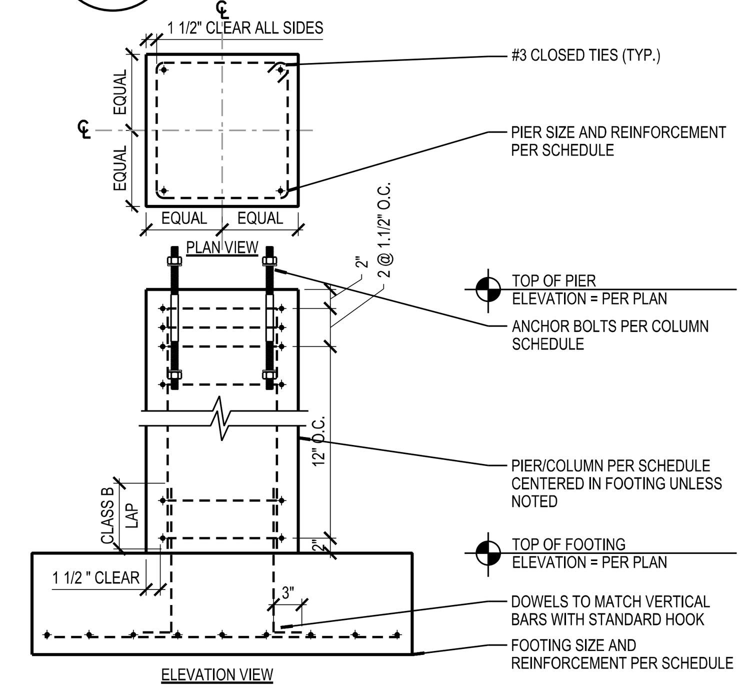

07 TYPICAL PIER
S801 SCALE: 3/4"=1'-0"

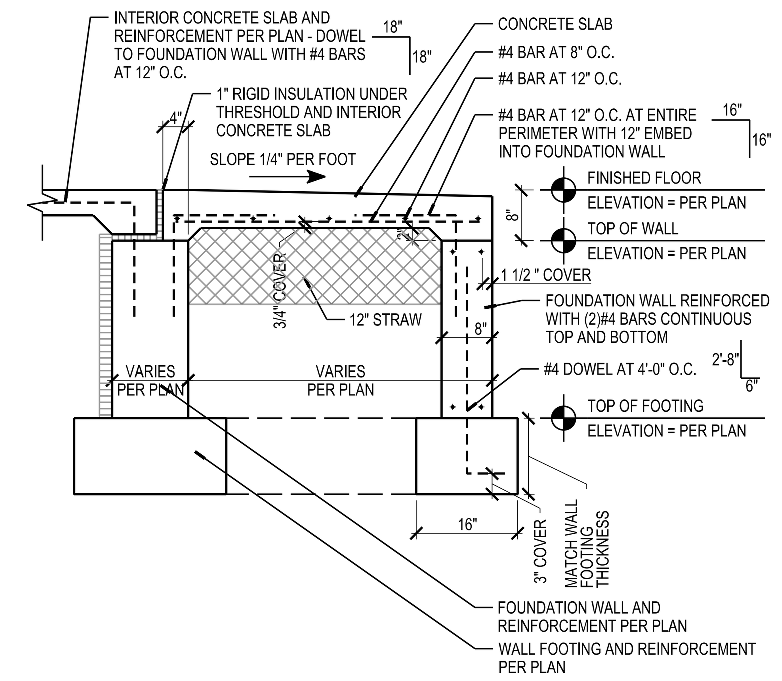

03 CONCRETE STOOP
S801 SCALE: 1/2"=1'-0"

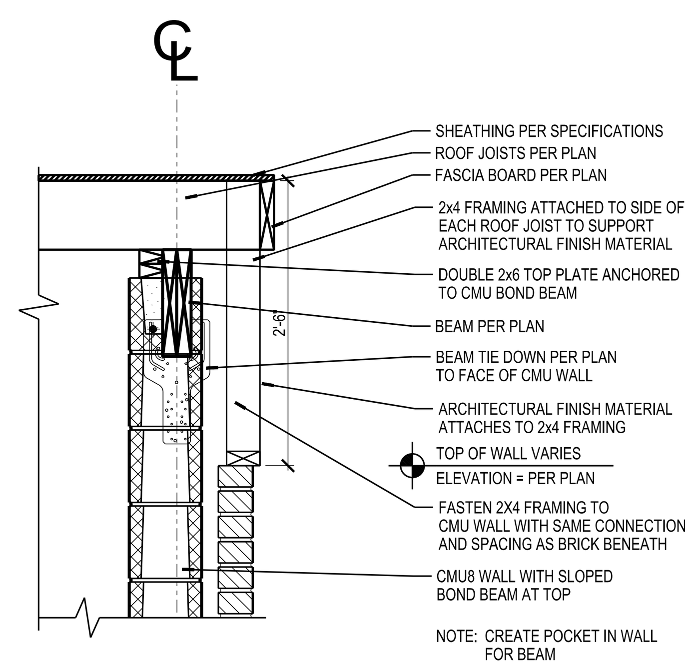

18 PAVILION BEAM TO WALL CONNECTION
S801 SCALE: 3/4"=1'-0"

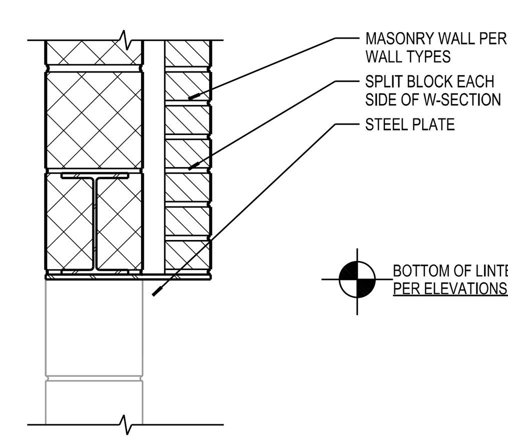

14 MASONRY W-SECTION LINTEL
S801 SCALE: 1"=1'-0"

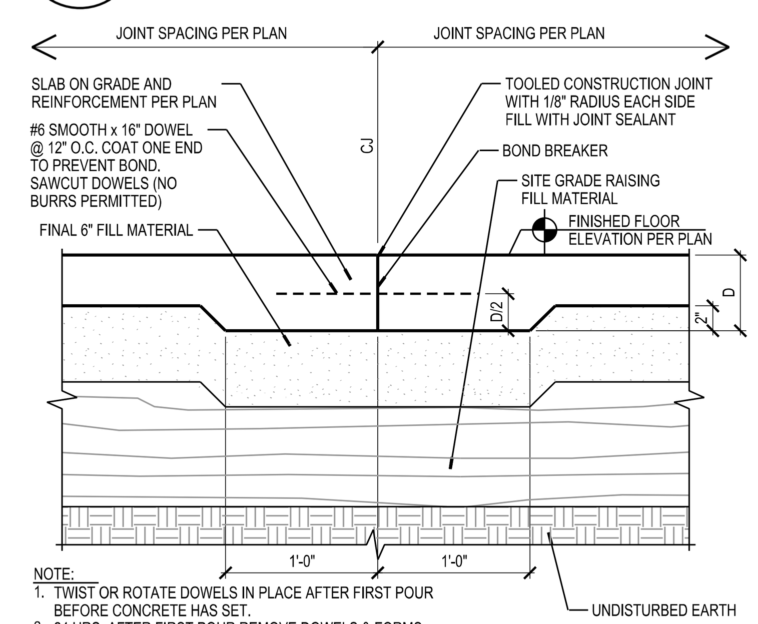

NOTE:
1. TWIST OR ROTATE DOWELS IN PLACE AFTER FIRST POUR BEFORE CONCRETE HAS SET.
2. 24 HRS. AFTER FIRST POUR REMOVE DOWELS & FORMS AND PREPARE SOIL ADJACENT TO SLAB.
3. COAT DOWELS & INSERT INTO HOLES AND POUR ADJACENT SLAB.

10 CONSTRUCTION JOINT (CJ) IN CONCRETE SLAB ON GRADE
S801 SCALE: 1"=1'-0"

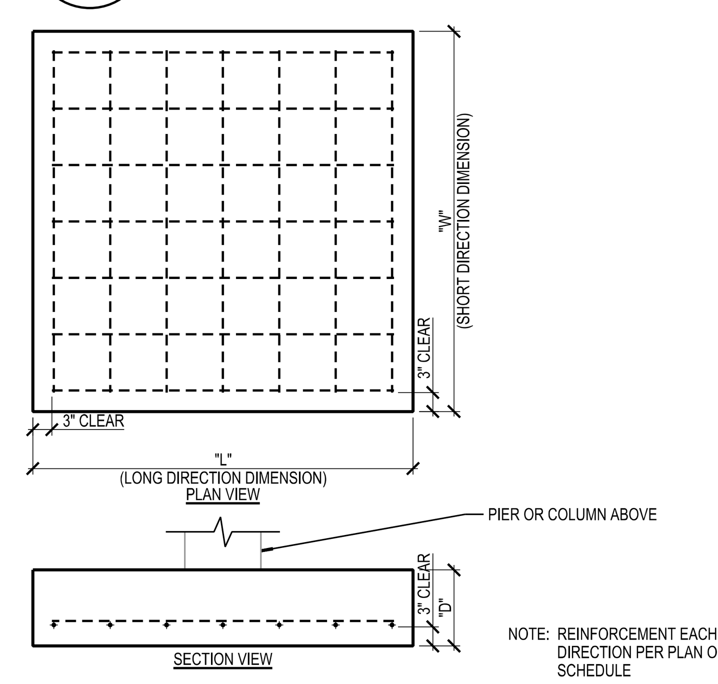

NOTE: REINFORCEMENT EACH DIRECTION PER PLAN OR SCHEDULE

06 SQUARE SPREAD FOOTING REBAR DISTRIBUTION
S801 SCALE: 1/2"=1'-0"

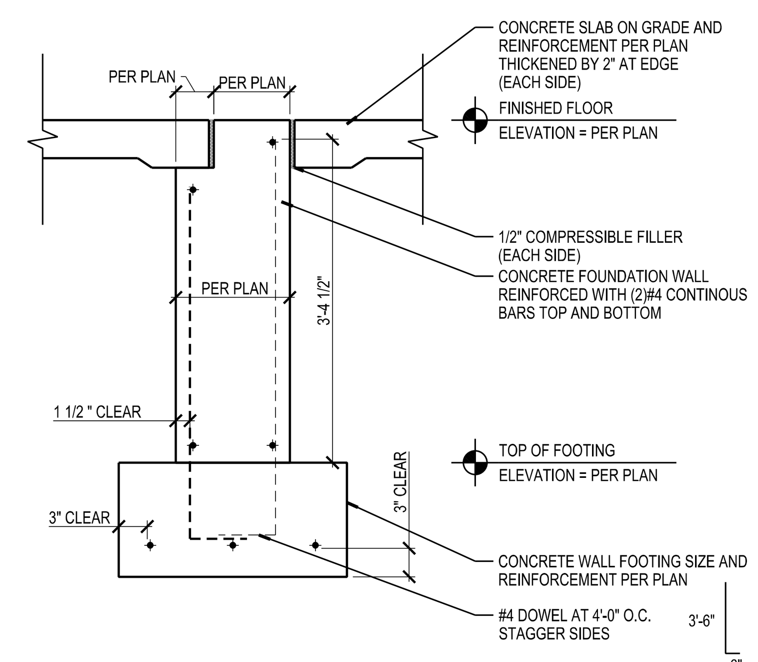

02 INTERIOR FOUNDATION WALL AND FOOTING
S801 SCALE: 3/4"=1'-0"

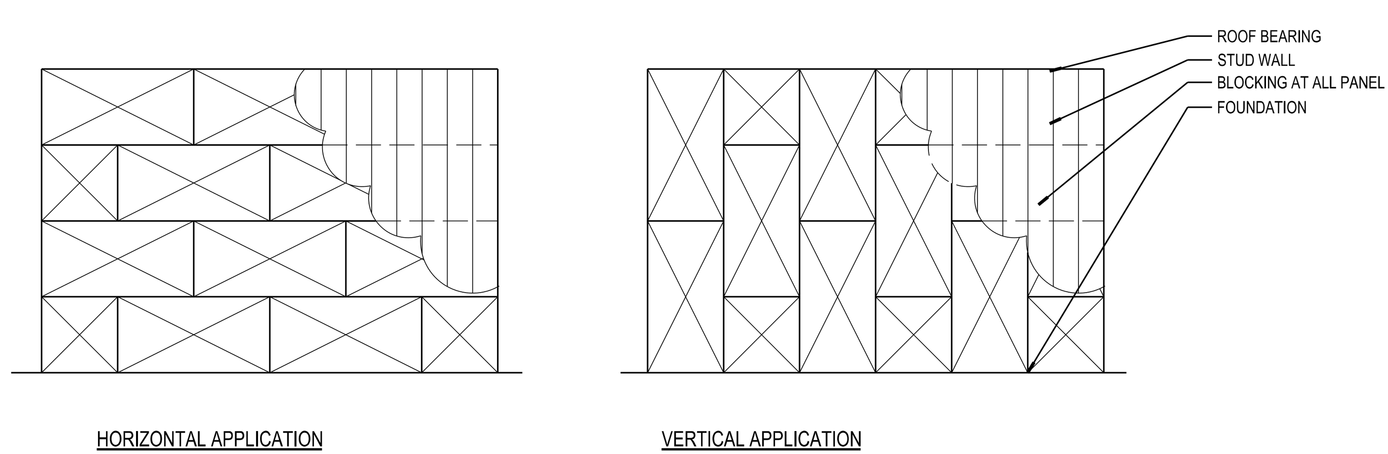

NOTE: NAIL SHEATHING PER A.P.A. FASTENER RECOMMENDATIONS FOR SPECIFIED LOADING AND THE FOLLOWING MAXIMUM SPACING.
A) 8d AT 6" ON CENTER AT ALL SUPPORTED EDGES
B) 8d AT 12" ON CENTER AT INTERMEDIATE SUPPORTS

21 SHEAR DIAPHRAGM SHEATHING APPLICATION DIAGRAM
S801 SCALE: 1/8"=1'-0"

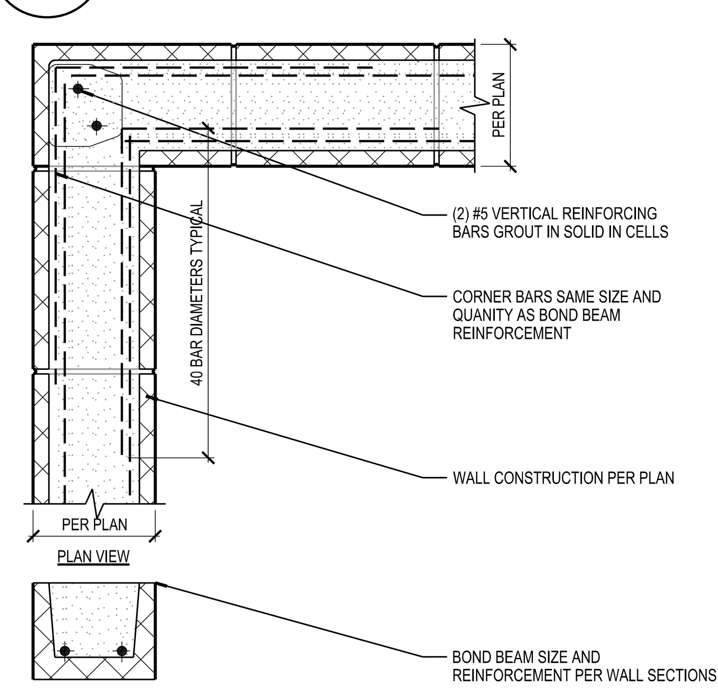

13 BOND BEAM AT WALL CORNER
S801 SCALE: 1"=1'-0"

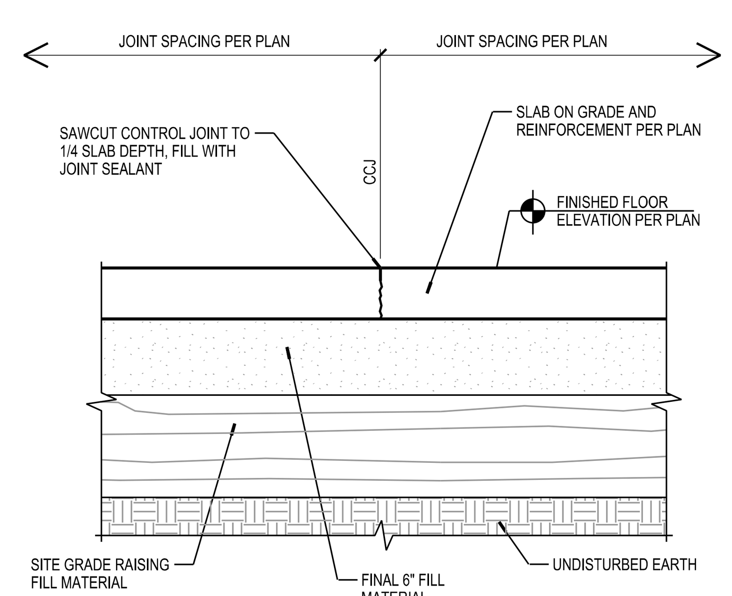

09 CRACK CONTROL JOINT (CCJ) IN CONCRETE SLAB ON GRADE
S801 SCALE: 1"=1'-0"

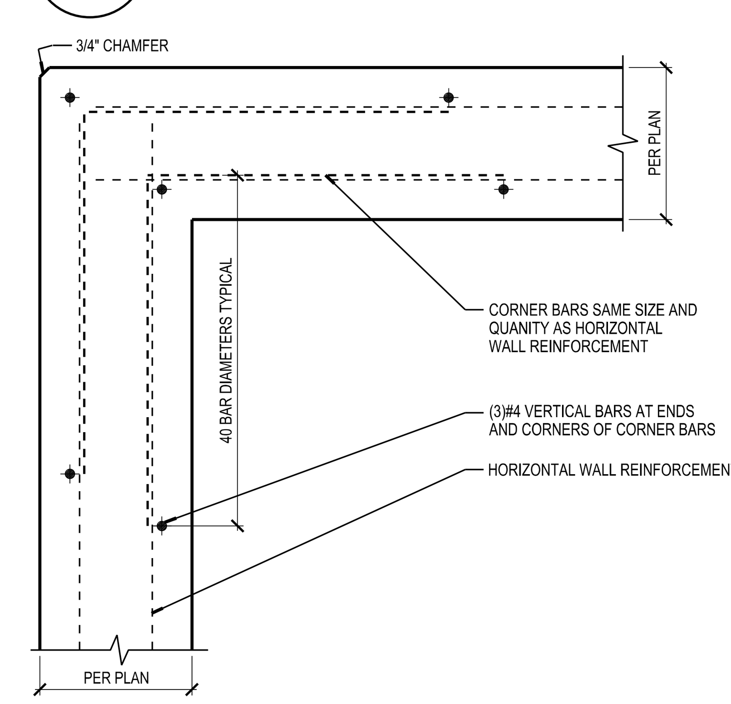

05 CONCRETE FOUNDATION CORNER PLAN
S801 SCALE: 1"=1'-0"

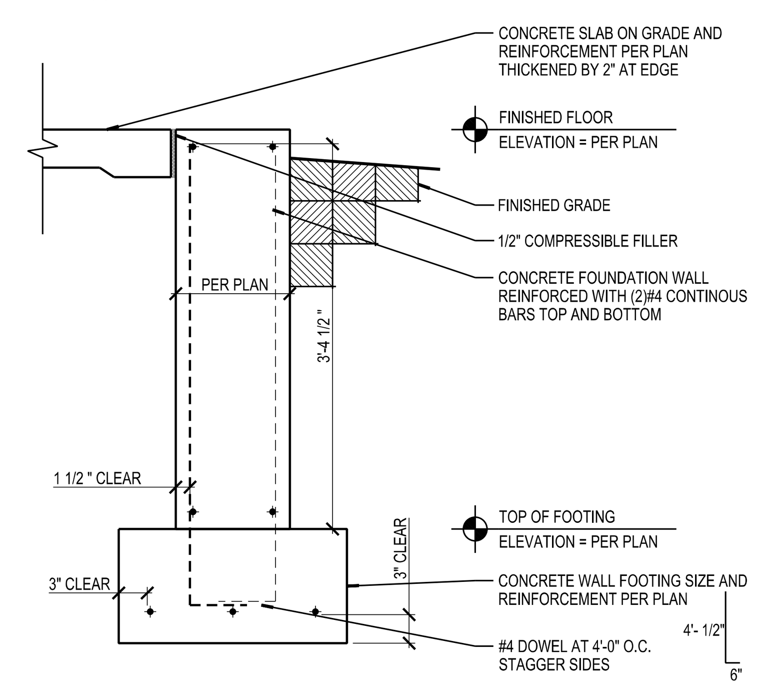

01 EXTERIOR FOUNDATION WALL AND FOOTING
S801 SCALE: 3/4"=1'-0"

STATE REVIEW DRAWINGS / CONSTRUCTION DOCUMENTS

SCALE: 1/8"=1'-0"
PLOTTED BY: tyera
ORIGINAL SIZE = 24" x 36"
X:\67220\cad\67220\s801.dgn

Due to electronic distribution, this drawing may not be printed to the scale indicated on the drawings. Do NOT use scale to determine dimensions or sizes.

ISSUANCES	REVISIONS
STATE BUILDING REVIEW SUBMITTAL - 05/02/2020	

Copyright © 2020 Angus-Young Associates, Inc., All Rights Reserved

Angus Young
Balance in Creativity
Architecture
Engineering
Interior Design
555 South River Street Janesville, WI 53548-4783
Ph: 608.756.2326 Fx: 608.756.0464
www.angusyoung.com

NEW PAVILION AND SITE IMPROVEMENTS
THE GATHERING PLACE
MILTON, WI

Due to electronic distribution, this drawing may not be printed to the scale indicated on the drawings. Do NOT use scale to determine dimensions or sizes.

PROJECT NUMBER 67220
APPROVED BY JJS
REVIEWED BY JJS
DRAWN BY CRS
6/1/2020 7:14:06 AM

STRUCTURAL DETAILS

S801

MECHANICAL PLAN

SCALE: 1/4"=1'-0"

GENERAL NOTES

1. EF-1 = GREENHECK EXHAUST FAN, MODEL NAME SP-A290. TOTAL EXTERNAL STATIC PRESSURE = .053 WITH A FAN SPEED OF 1050RPM

STATE REVIEW DRAWINGS / CONSTRUCTION DOCUMENTS

ORIGINAL SIZE = 24" x 36"
X:\67220\dwf\67220\M101.dgn
SCALE: 1/4"=1'-0"
PLOTTED BY: tylera

Due to electronic distribution, this drawing may not be printed to the scale indicated on the drawings. Do NOT use scale to determine dimensions or sizes.

Angus Young
Architecture
Engineering
Interior Design
Balance in Creativity
555 South Bird Street Janesville, WI 53548-4733
Ph. 608.756.2326 Fax 608.756.0464
www.angusyoung.com

ISSUANCES

STATE BUILDING REVIEW SUBMITTAL - 05/02/2020	

REVISIONS

Copyright © 2020 Angus-Young Associates, Inc., All Rights Reserved

NEW PAVILION AND
SITE IMPROVEMENTS
THE GATHERING PLACE
MILTON, WI

PROJECT NUMBER	67220
APPROVED BY	JJS
REVIEWED BY	JJS
DRAWN BY	SJG
6/1/2020	7:14:47 AM

MECHANICAL DRAWING

M101

Due to electronic distribution, this drawing may not be printed to the scale indicated on the drawings. Do NOT use scale to determine dimensions or sizes.

FIXTURE SCHEDULE

TAG	DESCRIPTION	MANUFACTURER	MODEL NUMBER	FAUCET	ACCESSORIES
CP-1	CIRCULATION PUMP	Bell & Gossett	NBF-12F/LW, 3/4-inch.	N/A	120 VAC 55 WATT. PROIVIDE BALL VALVES AND FLAGNGES OR UNIONS ON BOTH SIDES OF PUMP
ET-1	DOMESTIC WATER EXPANSION TANK	Bell & Gossett	FXA-200	N/A	
FD-1	FLOOR DRAIN	ZURN	ZN415 B	N/A	PROVIDE 5" DIAMETER NICKEL BRONZE STRAINER PROVIDE TRAP SEAL SIMILAR TO SURE SEAL FLOOR DRAIN TRAP SEAL
FCO-1	EXTRA-HEAVY-DUTY "LEVEL-TROL" ADJUSTABLE FLOOR CLEANOUT	ZURN	Z1400	NA	PROVIDE HEAVY DUTY STAINLESS STEEL TOP
L-1	WALL MOUNTED VITREOUS CHINA LAVATORY	AMERICAN STANDARD	355.012	Kohler Coralais K-15182-F	PROVIDE STOPS,ESCUTCHEONS, CHROME PLATED SUPPLY TUBES, P-TRAP, OFFSET GRID DRAIN, TRAP AND SUPPLY COVERS. PROVIDE THERMOSTATIC MIXING VALVE SYMMONS 4-10 B TO LIMIT DELIVERED WATER TEMPERATURE TO 110° F. PROVIDE CONCEALED ARM WALL CARRIER
S-1	WALL MOUNTED HAND SINK	ELKAY	CHS1716C	MANUFACTURER'S STANDARD ADA COMPLIANT CHROME 2 HANDLE GOOSENECK FAUCET	PROVIDE STOPS,ESCUTCHEONS, CHROME PLATED SUPPLY TUBES, P-TRAP, OFFSET GRID DRAIN, TRAP AND SUPPLY COVERS. PROVIDE THERMOSTATIC MIXING VALVE SYMMONS 4-10 B TO LIMIT DELIVERED WATER TEMPERATURE TO 110° F.
MSB-1	FLOOR MOUNTED MOP SINK	MUSTEE	63M	CHICAGO 897RCF WITH WATTS 8AC VACUUM BREAKER	PROVIDE HOSE BRACKET AND STAINLESS STEEL WALL SPLASH GUARDS
UR-1	WALL MOUNTED WASH DOWN URINAL WITH BATTERY POWERED AUTOSENSOR FLUSHOMETER	AMERICAN STANDARD	6501.01	SLOAN 8186-1	WALL SUPPORT IS PLUMBING CONTRACTORS RESPONSIBILITY. PROVIDE BLOCKING AS REQUIRED.
WC-1	WHITE VITREOUS CHINA PRESSURE ASSISTED TANK TYPE WATER CLOSET ADA	KOHLER OR EQUAL	K-3493	NA	PROVIDE OPEN FRONT ELONGATED WHITE PLASTIC SEATS WITH STAINLESS STEEL SELF SUSTAINING CHECK HINGE. ACCEPTABLE MANUFACTURERS ARE BEMIS, AMERICAN STANDARD, KOHLER, CENTOCO.
WCO-1	WALL CLEAN OUT	ZURN	CO24530	NA	ACCESS COVER AND PLUG, ROUND STAINLESS STEEL WALL ACCESS COVER COMPLETE WITH SECURING SCREW. PROVIDE TAPPED CLEAN OUT PLUG FOR SECURING COVER. INSTALL WHERE REQUIRED BY PLUMBING CODE.
WH-1	30 GALLON ELECTRIC WATER HEATER	AO SMITH	MODEL #: E6-30M6-45SV	NOMINAL CAPACITY: 30 GAL, RATED STORAGE VOLUME: 27, ELECTRICAL REQUIREMENTS: 4500W @ 240/1	CONTRACTOR SHALL PROVIDE ALL ACCESSORIES FOR CONNECTION OF WATER HEATER REQUIRED BY CODE. ROUTE T&P RELIEF VALVE DRAIN TO DRAIN PAN. PROVIDE GALVANIZED STEEL DRAIN PAN.

PLUMBING FIXTURE CONNECTION SCHEDULE

TAG	DESCRIPTION	CONNECTIONS			WSFU							DFU		
		WASTE	HOT/TEMPERED	COLD	HOT/TEMPERED	COLD	SUBTOTAL	FIXTURES	H/T SUBTOTAL	COLD SUBTOTAL	TOTAL	VALUE	FIXTURES	TOTAL
FD-1	FLOOR DRAIN	3"						4		0	0	3	3	9
HB-1	HOSE BIBB	-	-	3/4"	---	4	4	2	---	8	8	0	0	0
L-1	WALL MOUNT LAVATORY	1-1/4"	1/2"	1/2"	0.50	0.50	1	2	1	1	2	1	2	2
S-1	SINGLE BOWL SINK	1 1/2	3/4"	3/4"	---	2	2	1	---	2	2	2	1	2
MSB-1	FLOOR MOUNTED MOP SINK	3"	3/4"	3/4"	2.00	2.00	3	1	2	2	3	3	1	3
UR-1	URINAL	1 1/2		3/4"	1.50	1.5	2	1	1.5	1.5	2	2	11	22
WC-1	ADA PUBLIC GRAVITY FLUSH WATER CLOSET	4"		1"		3.00	3	3	0	9	9	6	4	24
								14			26		22	62

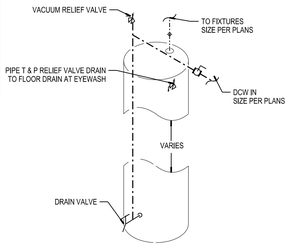

NOTE: CONTRACTOR SHALL INSTALL WATERMHEATER PER MANUFACTURER'S RECOMMENDATIONS. SCHEMATIC IS GERERAL IN NATURE AND MAY OR MAY NOT REFLECT ACTUAL INSTALLATION REQUIREMENTS.

04 / P101 ELECTRIC WATER HEATER DETAIL

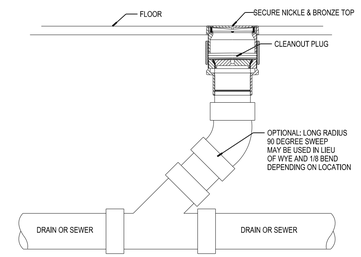

11 / P101 FLOOR CLEANOUT

SCALE: NONE

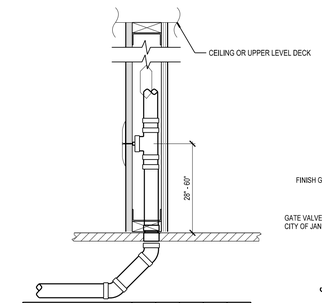

NOM. PIPE SIZE	2"	3"	4"	6"	8"
MIN. WALL WIDTH	3-1/2"	5-1/2"	7-1/2"	9-1/2"	11-1/2"

NOTE: WALL DIMENSIONS ARE TAKEN FROM STUD FACE TO STUD FACE

07 / P101 WALL CLEANOUT

SCALE: NONE

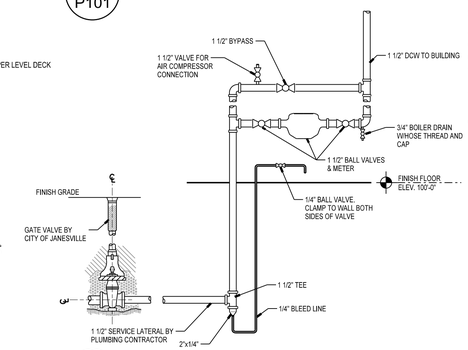

03 / P101 WATER SERVICE ENTRANCE DETAIL

SCALE: NONE

Water Calculation for	THE GATHERING PLACE WATER CALC					
	Name of project					
	INFORMATION REQUIRED TO CALCULATE WATER SERVICE SIZE					
1	Demand of Building in GPM	(convert WSFU's to gpm) WSFUs	=	(GPM)		35.00
2	Difference in Elevation from main or external pressure tank to building control valve.			(feet)		7
	(If the water source is lower than the control valve use negative # if higher than the control valve use positive #)					
3	Size of the Water Meter. (when applicable)					2
4	Developed length from main or ext pressure tank to building control valve.					175
5	Low Pressure at main in street or external pressure tank.					48
	CALCULATE WATER SERVICE PRESSURE LOSS					
6	LOW PRESSURE AT POINT OF CONNECTION					48
7	Water service diameter is 2 Material is TYPE L Pressure Loss					-2.45
	per 100 ft. = 1.4 psi x 175					
	(Subtract line 7 from line 6)			Subtotal		45.55
8	Determine pressure gain or loss due to elevation, (multiply the value of # 2 above by .434				=	3.038
9	Available pressure after the building control valve. (Subtract or add line 8. Enter in B)			Subtotal		42.512
	CALCULATE THE PRESSURE AVAILABLE FOR UNIFORM LOSS (VALUE OF A)					
B	Available Pressure after the building control valve	(from 9 above)		Value of B		42.512
C	Pressure Loss of water meter (when meter is required)			Value of C		3.6
				Subtotal		38.912
D	Pressure at controlling fixture			Value of D		20
	(Controlling fixture is Water Closet					
				Subtotal		18.912
E	Difference in elevation between the building control valve and the controlling fixture in feet	10 x .434		Value of E		4.34
				Subtotal		14.572
F	Pressure loss due to water treatment devices, instantaneous water heaters and backflow preventers which serve the controlling fixture.			Value of F		10
	(Pressure loss due to Future Water Softner)					
				Subtotal		4.572
G	Developed length from the building control valve to the controlling fixture in ft.	50 X 1.5		Value of G		75
		(Divde by the value of G)		Subtotal		0.06096
	(Water Dist Pipe Material is) TYPE L COPPER					
A	Pressure available for uniform loss				A =	6.096
			Rounded up		A =	7

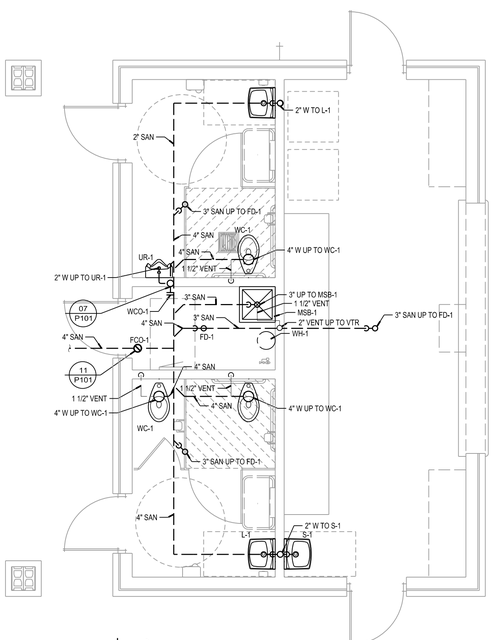

UNDERGROUND PLUMBING PLAN

SCALE: 1/4"=1'-0"

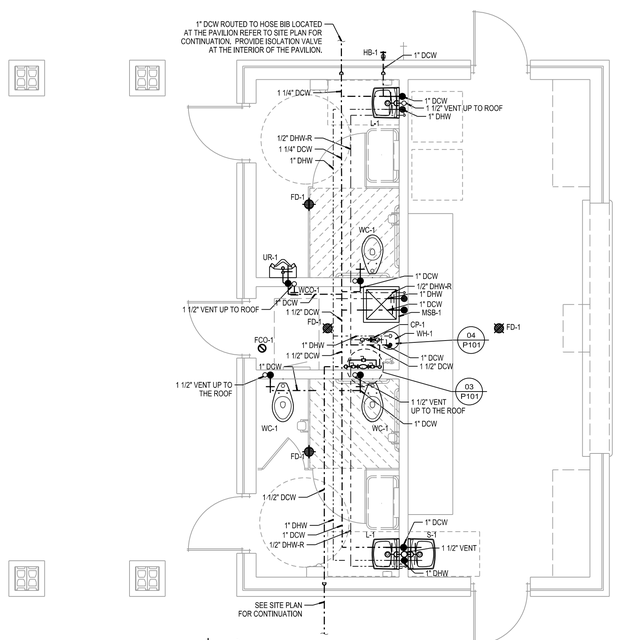

ABOVE GROUND PLUMBING PLAN

SCALE: 1/4"=1'-0"

PLUMBING ABBREVIATION LEGEND

AAV	AUTOMATIC AIR VALVE	MFG	MANUFACTURER, MANUFACTURED
AFF	ABOVE FINISHED FLOOR	NPW	NON-PORTABLE WATER
BFF	BELOW FINISHED FLOOR	OC	ON CENTER
BHP	BRAKE HORSEPOWER	PC	PLUMBING CONTRACTOR
BOP	BOTTOM OF PIPE	PRES	PRESSURE
CA	COMPRESSED AIR	PD	PRESSURE DROP
CO	CLEANOUT	PERF	PERFORATED
COMP	COMPRESSOR	POC	POINT OF CONNECTION
CONN	CONNECTION	PSI	POUNDS PER SQUARE INCH GAGE
COP	COEFICIENT OF PERFORMANCE	PSIA	POUNDS PER SQUARE INCH ABSOLUTE
COTG	CLEANOUT TO GRADE	PSIG	POUNDS PER SQUARE INCH GAGE
CWW	CLEAR WATER WASTE	RC	ROOFING CONTRACTOR
D	DIAMETER	RD	ROOF DRAIN
DIA	DIAMETER	RET	RETURN
DCW	DOMESTIC COLD WATER CITY	SAN	SANITARY SEWER
DCWS	DOMESTIC COLD WATER SOFT	SF	SQUARE FEET
DET	DETAIL	SFU	WATER SUPPLY FIXTURE UNIT
DFU	DRAINAGE FIXTURE UNIT	SOV	SHUT-OFF VALVE
DHW	DOMESTIC HOT WATER	SP	STANDPIPE
DHWR	DOMESTIC HOT WATER RETURN	ST	STORM SEWER
DTW	DOMESTIC TEMPERED WATER	STM	STEAM
EC	ELECTRICAL CONTRACTOR	SUP	SUPPLY
ELEV	ELEVATION	TC	TEMPERATURE CONTROLS CONTRACTOR
EWT	ENTERING WATER TEMPERATURE	TDH	TOTAL DYNAMIC HEAD
EXG	EXISTING	TFA	TO FLOOR ABOVE
FCO	FLOOR CLEANOUT	TFB	TO FLOOR BELOW
FD	FLOOR DRAIN	THRU	THROUGH
FFA	FROM FLOOR ABOVE	TMV	THERMOSTATIC MIXING VALVE
FFB	FROM FLOOR BELOW	TSTAT	THERMOSTAT
FLA	FULL LOAD AMPS	TYP	TYPICAL
FPC	FIRE PROTECTION CONTRACTOR	T&P	TEMPERATURE AND PRESSURE
G	GAS	T/C	TIME CLOCK
GA	GAGE	UF	UNDERFLOOR
GC	GENERAL CONTRACTOR	UG	UNDERGROUND
GI	GREASE INTERCEPTOR	V	SANITARY VENT
GPM	GALLONS PER MINUTE	VTR	VENT THROUGH ROOF
GYP	GYPSUM WALL BOARD	VTW	VENT THROUGH WALL
HP	HORSEPOWER	W	WASTE SEWER
IE	INVERT ELEVATION	WC	WATER COLUMN PRESSURE
IW	INDIRECT WASTE	WCO	WALL CLEANOUT
IW	INDUSTRIAL WASTE	WG	WATER GAGE PRESSURE
LWT	LEAVING WATER TEMP.	WHA	WATER HAMMER ARRESTER
MAV	MANUAL AIR VENT	W/	WITH
MBH	THOUSAND BTU PER HOUR	W/O	WITHOUT
MC	MECHANICAL CONTRACTOR		

NOTE: ALL ABBREVIATIONS MAY NOT BE USED IN THIS SET.

GENERAL NOTES

1. COORDINATE ALL PLUMBING WITH GENERAL CONTRACTOR, ELECTRICAL, AND HVAC CONTRACTORS.
2. INSTALL SYMMONS 4-10 SERIES OR EQUAL THERMOSTATIC MIXING VALVE ON ALL HOT WATER SUPPLIES TO ALL LAVATORIES, AND HAND SINKS. TEMPERED WATER SHALL BE SET AT 110 DEG.
3. SUSPENDED PIPING AFF SHALL BE INSTALLED TIGHT TO BOTTOM OF STRUCTURE.
4. ALL PIPING IN FINISHED AREAS SHALL BE CONCEALED ABOVE CEILINGS OR WITHIN WALLS.
5. INSTALL ALL WATER PIPING PITCHED TO DRAIN TO LOWEST POINTS. PROVIDE MEANS TO DRAIN THE PIPE.
6. INSTALL 3" AND LARGER DRAIN PIPE WITH MINIMUM PITCH OF 1/8" PER LINEAR FOOT. EXCEPT FOR 6" SAN @ 1/16"LF
7. INSTALL 2" AND SMALLER DRAIN PIPE WITH MINIMUM PITCH OF 1/4" PER LINEAR FOOT.
8. ALL PIPING IN FINISHED AREAS SHALL BE CONCEALED ABOVE CEILINGS OR WITHIN WALLS.

STATE REVIEW DRAWINGS / CONSTRUCTION DOCUMENTS

REVISIONS

ISSUANCES

STATE BUILDING REVIEW SUBMITTAL - 05/02/2020

Copyright © 2020 Angus-Young Associates, Inc., All Rights Reserved

Due to electronic distribution, this drawing may not be printed to the scale indicated on the drawings. Do NOT use scale to determine dimensions or sizes.

Angus Young
Architecture Engineering Interior Design
Balance in Creativity
555 South Bluff Street Janesville, WI 53548-4783
Ph. 608.756.3326 Fax. 608.756.0464
www.angusyoung.com

NEW PAVILION AND SITE IMPROVEMENTS
THE GATHERING PLACE
MILTON, WI

PROJECT NUMBER 07220
APPROVED BY JJS
REVIEWED BY JJS
DRAWN BY SJG
6/1/2020 6:30:48 AM

UNDERGROUND / ABOVE GROUND PLUMBING PLANS

P101

SCALE: 1/4"=1'-0"
PLOTTED BY: tylevia
ORIGINAL SIZE = 24" x 36"
X:\07220\cad\07220ref\P101.dgn

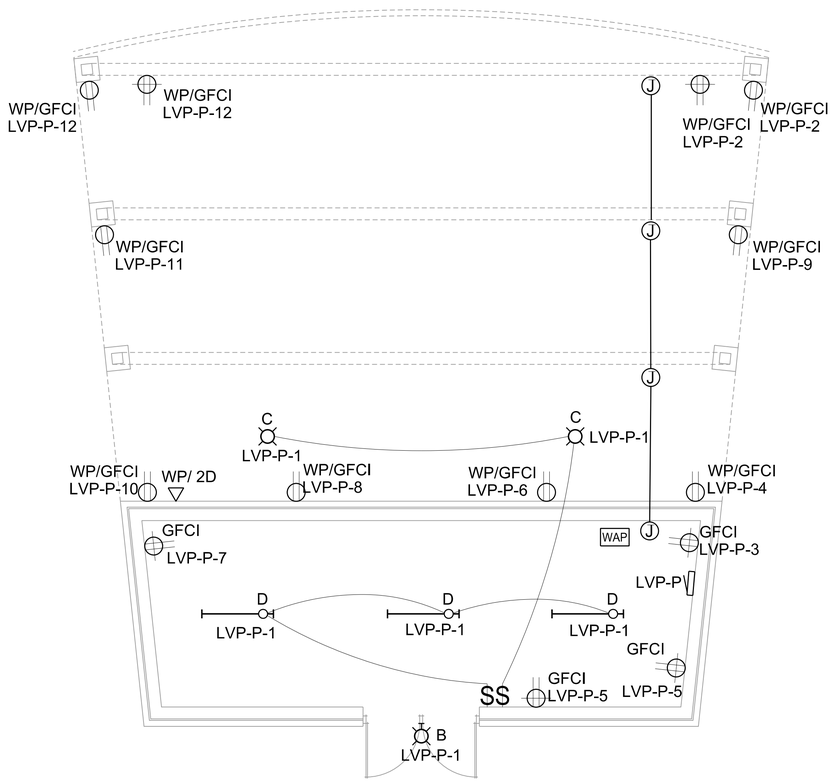

PAVILION ELECTRICAL PLAN

SCALE: 1/8"=1'-0"

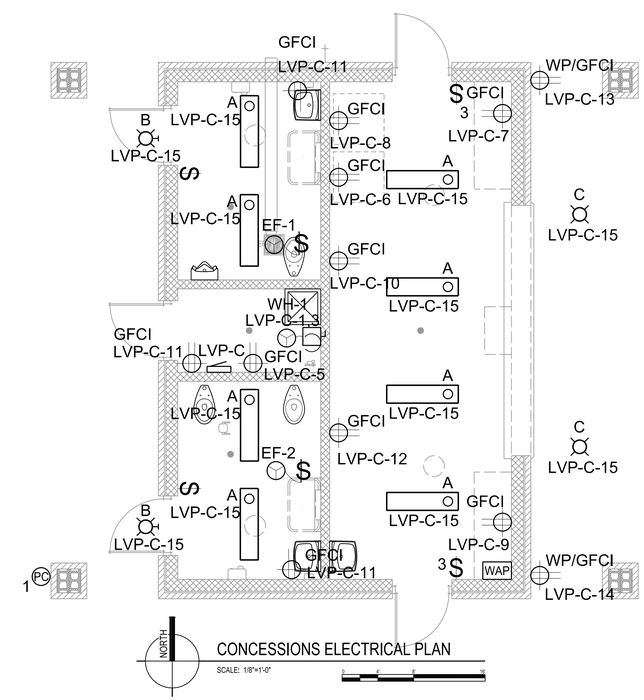

CONCESSIONS ELECTRICAL PLAN

SCALE: 1/8"=1'-0"

GENERAL NOTES

1. COORDINATE WITH LOCAL UTILITY TO INSTALL 100A 240/120V SERVICE TO CONCESSION STAND.
2. PROVIDE AND INSTALL 60A MCB 240/120V 18 SPACE PANELBOARD LVP-P IN LOCATION NOTED ON PLANS. FEED VIA (3) COPPER #2 IN 1-1/4" PVC.

KEYNOTES

01 PROVIDE, PAINT, AND INSTALL 1" GRC CONDUIT AND 4" JUNCTION BOXES ALONG CEILING FROM STORAGE ROOM AS SHOWN DIAGRAMATICALLY.

Due to electronic distribution, this drawing may not be printed to the scale indicated on the drawings. Do NOT use scale to determine dimensions or sizes.

REVISIONS

ISSUANCES

STATE BUILDING REVIEW SUBMITTAL - 06/02/2020

Copyright © 2020 Angus-Young Associates, Inc., All Rights Reserved

Angus Young
Balance in Creativity
Architecture
Engineering
Interior Design
555 South Bluff Street Janesville, WI 53548-4733
Ph. 608.756.3326 Fx. 608.756.0464
www.angusyoung.com

NEW PAVILION AND
SITE IMPROVEMENTS
THE GATHERING PLACE
MILTON, WI

Due to electronic distribution, this drawing may not be printed to the scale indicated on the drawings. Do NOT use scale to determine dimensions or sizes.

PROJECT NUMBER
07220

APPROVED BY
JJS

REVIEWED BY
JJS

DRAWN BY
KJS

6/12/2020 11:15:19 AM

CONCESSION AND
PAVILLION
ELECTRICAL PLAN

E101

SCALE: 1/4"=1'-0"

PLOTTED BY: KaleS

ORIGINAL SIZE = 24" x 36"

X:\07220\sub\07220\sheE101.dgn

STATE REVIEW DRAWINGS / CONSTRUCTION DOCUMENTS

LVP-C

ROOM	VOLTS 240/120V 2P 3W	AIC 22,000
MOUNTING SURFACE	BUS AMPS 100	MAIN BKR 100
FED FROM UTILITY	NEUTRAL 100%	LUGS STANDARD
NOTE		

CKT #	CKT BKR	LOAD KVA	CIRCUIT DESCRIPTION		CKT #	CKT BKR	LOAD KVA	CIRCUIT DESCRIPTION
1	30/2	4.5	WH-1	a	2	60/2	2.68	PANEL LVP-P
3	|			b	4	|		
5	20/1	0.18	CIRC PUMP RECEPTACLE	a	6	20/1	0.18	RECEPTACLE
7	20/1	0.18	RECEPTACLE	b	8	20/1	0.18	RECEPTACLE
9	20/1	0.18	RECEPTACLE	a	10	20/1	0.18	RECEPTACLE
11	20/1	0.54	RECEPTACLE	b	12	20/1	0.18	RECEPTACLE
13	20/1	0.18	RECEPTACLE	a	14	20/1	0.18	RECEPTACLE
15	20/1	0.272	LIGHTING	b	16	20/1	0	SPARE
17	20/1	0	SPARE	a	18	-/1	0	SPACE
19	20/1	0	SPARE	b	20	-/1	0	SPACE
21	-/1	0	SPACE	a	22	-/1	0	SPACE
23	-/1	0	SPACE	b	24	-/1	0	SPACE
25	-/1	0	SPACE	a	26	-/1	0	SPACE
27	-/1	0	SPACE	b	28	-/1	0	SPACE
29	-/1	0	SPACE	a	30	-/1	0	SPACE

	CONN. KVA	CALC. KVA			CONN. KVA	CALC. KVA	
LIGHTING	0.428	0.534	(125%)	CONTINUOUS	0	0	(125%)
LARGEST MOTOR	0	0	(125%)	HEATING	4.5	4.5	(100%)
OTHER MOTORS	0	0	(100%)	NONCONTINUOUS	0	0	(100%)
RECEPTACLES	4.68	4.68	(50%>10)	KITCHEN EQUIP	0	0	(N/A)
				NONCOIN/DIVERSE	0	0	(N/A)
				TOTAL KVA	9.61	9.71	

BALANCED PHASE AMPS 40.5

PHASE BALANCE PERCENT: PHASE A 98.8% PHASE B 101%

LVP-P

ROOM	VOLTS 240/120V 2P 3W	AIC 22,000
MOUNTING SURFACE	BUS AMPS 60	MAIN BKR 60
FED FROM LVP-C	NEUTRAL 100%	LUGS STANDARD
NOTE		

CKT #	CKT BKR	LOAD KVA	CIRCUIT DESCRIPTION		CKT #	CKT BKR	LOAD KVA	CIRCUIT DESCRIPTION
1	20/1	0.155	LIGHTING	a	2	20/1	0.36	RECEPTACLE
3	20/1	0.18	RECEPTACLE	b	4	20/1	0.18	RECEPTACLE
5	20/1	0.36	RECEPTACLE	a	6	20/1	0.18	RECEPTACLE
7	20/1	0.18	RECEPTACLE	b	8	20/1	0.18	RECEPTACLE
9	20/1	0.18	RECEPTACLE	a	10	20/1	0.18	RECEPTACLE
11	20/1	0.18	RECEPTACLE	b	12	20/1	0.36	RECEPTACLE
13	-/1	0	SPACE	a	14	-/1	0	SPACE
15	-/1	0	SPACE	b	16	-/1	0	SPACE
17	-/1	0	SPACE	a	18	-/1	0	SPACE

	CONN. KVA	CALC. KVA			CONN. KVA	CALC. KVA	
LIGHTING	0.155	0.194	(125%)	CONTINUOUS	0	0	(125%)
LARGEST MOTOR	0	0	(125%)	HEATING	0	0	(100%)
OTHER MOTORS	0	0	(100%)	NONCONTINUOUS	0	0	(100%)
RECEPTACLES	2.52	2.52	(50%>10)	KITCHEN EQUIP	0	0	(N/A)
				NONCOIN/DIVERSE	0	0	(N/A)
				TOTAL KVA	2.68	2.71	

BALANCED PHASE AMPS 11.3

PHASE BALANCE PERCENT: PHASE A 106% PHASE B 94.2%

NEW LUMINAIRE SCHEDULE

CALLOUT	SYMBOL	LAMP	DESCRIPTION	BALLAST / DRIVER	MOUNTING	MODEL	INPUT WATTS	VOLTS	NOTE 1	NOTE 2
A		(1) LED, 3500K	4' VANDAL RESISTANT LED	LED DRIVER	CEILING	LUMINAIRE LED VPF84-25W-3500K-DIM-120-277-CP-BLK-OCC	25	120V 1P 2W	INTEGRATED OCCUPANCY SENSOR	
B		(1) LED, 3500K	LED WALL PACK	LED DRIVER	CEILING	WDGE1 LED-P1-35K-80CRI-VW-MVOLT-SRM-DBLXD	10	120V 1P 2W	MOUNT AT 7'-6" TO BOTTOM AFG	
C		(1) LED, 3500K	VANDAL RESISTANT LED	LED DRIVER	SURFACE	LUMINAIRE LED SWP1212-MIN10-25W-35K-MVOLT-CLP-BLK	26.14	120V 1P 2W		
D		LED, 4000K	4' LED STRIP	LED DRIVER	CEILING	METALUX 4SNLED-LD5-37SL-LW-UNV-L840-CD1-U	31	120V 1P 2W		
F		LED, 3000K	IN-GRADE LED UPLIGHT	LED DRIVER	CEILING	LUMIERE MONACO 3002A-RD-18LED3000-MFL-CLR-UNV-BZ	16.6	120V 1P 2W	SEE IN-GRADE FLOOD DETAIL XXXX/XX	
P1		(1) LED, 4000K	POLE MOUNT LED	LED DRIVER	CEILING	MCGRAW EDISON GLNA-AF-01-LED-E1-SL4-HSS-BK	59	120V 1P 2W	MOUNT ON 20'-0" SQUARE STEEL POLE WITH 8" CONCRETE BASE.	SEE BASE DETAIL XX/XXXX

HVAC EQUIPMENT SCHEDULE

CALLOUT	SYMBOL	DESCRIPTION	LOCATION	VOLTS	AMPS	KVA	HP	CIRCUIT	NOTE 1	NOTE 2	DISCONNECT
EF-1	$	EXHAUST FAN	MENS RESTROOM	120V 1P 2W	0.83	0.1	F HP		PROVIDE MOTOR RATED TOGGLE SWITCH DISCONNECT AND CONNECTION TO UNIT.	INTERLOCK WITH OCCUPANCY SENSOR.	TOGGLE SWITCH
EF-2	$	EXHAUST FAN	WOMENS RESTROOM	120V 1P 2W	0.83	0.1	F HP		PROVIDE MOTOR RATED TOGGLE SWITCH DISCONNECT AND CONNECTION TO UNIT.	INTERLOCK WITH OCCUPANCY SENSOR.	TOGGLE SWITCH

PLUMBING EQUIPMENT SCHEDULE

CALLOUT	SYMBOL	DESCRIPTION	LOCATION	VOLTS	AMPS	KVA	HP	CIRCUIT	NOTE 1	NOTE 2	DISCONNECT
WH-1		ELECTRIC WATER HEATER	MECHANICAL ROOM	240V 2P 2W	18.75	4.5		LVP-C-1,3	PROVIDE NON-FUSIBLE DISCONNECT SWITCH AND CONNECTION TO UNIT.	COORDINATE FINAL LOCATION WITH PLUMBING CONTRACTOR.	NON-FUSED

NEW RECEPTACLE SCHEDULE

CALLOUT	SYMBOL	NEMA	VOLTS	FEATURES	NOTE 1	NOTE 2	NOTE 3
RAISED GFCI DUPLEX	GFCI	5-20R	120V 1P 2W	GND	MOUNT @ 44" TO BOTTOM UNLESS NOTED OTHERWISE		
RAISED WEATHERPROOF GFCI DUPLEX	WP/GFCI	5-20R	120V 1P 2W	GND	MOUNT @ 84" TO BOTTOM UNLESS NOTED OTHERWISE	PROVIDE WITH IN-USE WEATHER PROOF COVER	
WEATHERPROOF GFCI DUPLEX	WP/GFCI	5-20R	120V 1P 2W	GND	MOUNT @ 24" TO BOTTOM UNLESS NOTED OTHERWISE	PROVIDE WITH IN-USE WEATHER PROOF COVER	
WEATHERPROOF RAISED GFCI DUPLEX	WP/GFCI	5-20R	120V 1P 2W	GND	MOUNT TO CEILING BEAM.	PROVIDE WITH IN-USE WEATHER PROOF COVER.	

NEW COMMUNICATIONS SCHEDULE

CALLOUT	SYMBOL	NOTE 1	NOTE 2	NOTE 3
WEATHERPROOF 2 DATA OUTLET	WP/ 2D	ROUTE TWO BLUE CAT 6 CABLE TO DATA PATCH PANEL SERVING THE AREA	MOUNT JACK IN SINGLE GANG DEVICE PLATE AT 16" AFF TO BOTTOM UNLESS OTHERWISE NOTED	PROVIDE WITH IN-USE WEATHER PROOF COVER
WIRELESS ACCESS POINT	WAP	ROUTE ONE BLUE CAT 6 CABLE TO DATA PATCH PANEL SERVING THE AREA.	COIL MINIMUM 6'-0" OF AT WAP LOCATION.	

*ALL FREE AIR CABLE TO BE PLENUM RATED.

NEW SWITCH SCHEDULE

CALLOUT	SYMBOL	NOTE 1	NOTE 2	NOTE 3
1 POLE SWITCH	$	MOUNT AT 44" TO BOTTOM UNLESS NOTED OTHERWISE		
3 WAY SWITCH	$3	MOUNT AT 44" TO BOTTOM UNLESS NOTED OTHERWISE		
EXTERIOR PHOTOCELL - LINE VOLTAGE	1	LOCATE HIGH ON WALL ON NORTH WALL OR WHERE SHOWN ON FLOORPLAN	ACCEPTABLE MODELS: INTERMATIC K4221C, TORK 2001, PRECISION ST-15	

STATE REVIEW DRAWINGS / CONSTRUCTION DOCUMENTS

1/8"=1'-0"

SCALE:

PLOTTED BY: KeinS

ORIGINAL SIZE = 24" x 36"

X:\6720\cad\67220keE301.dgn

Due to electronic distribution, this drawing may not be printed to the scale indicated on the drawings. Do NOT use scale to determine dimensions or sizes.

REVISIONS

ISSUANCES

STATE BUILDING REVIEW SUBMITTAL - 06/02/2020

Angus Young
Architecture
Engineering
Interior Design
Balance in Creativity
555 South Bluff Street Janesville, WI 53548-4733
Ph. 608.756.2326 Fax 608.756.0464
www.angusyoung.com

Copyright © 2020 Angus-Young Associates, Inc., All Rights Reserved

NEW PAVILION AND
SITE IMPROVEMENTS
THE GATHERING PLACE
MILTON, WI

PROJECT NUMBER 67220

APPROVED BY JJS

REVIEWED BY JJS

DRAWN BY KJS

6/12/2020 11:24:46 AM

ELECTRICAL & PANELBOARD SCHEDULES

E301

Due to electronic distribution, this drawing may not be printed to the scale indicated on the drawings. Do NOT use scale to determine dimensions or sizes.

ORIGINAL SIZE = 24" x 36"

X:\67220\cad\67220\hES01.dgn

SCALE: 1"=30'-0"

PLOTTED BY: KeithS

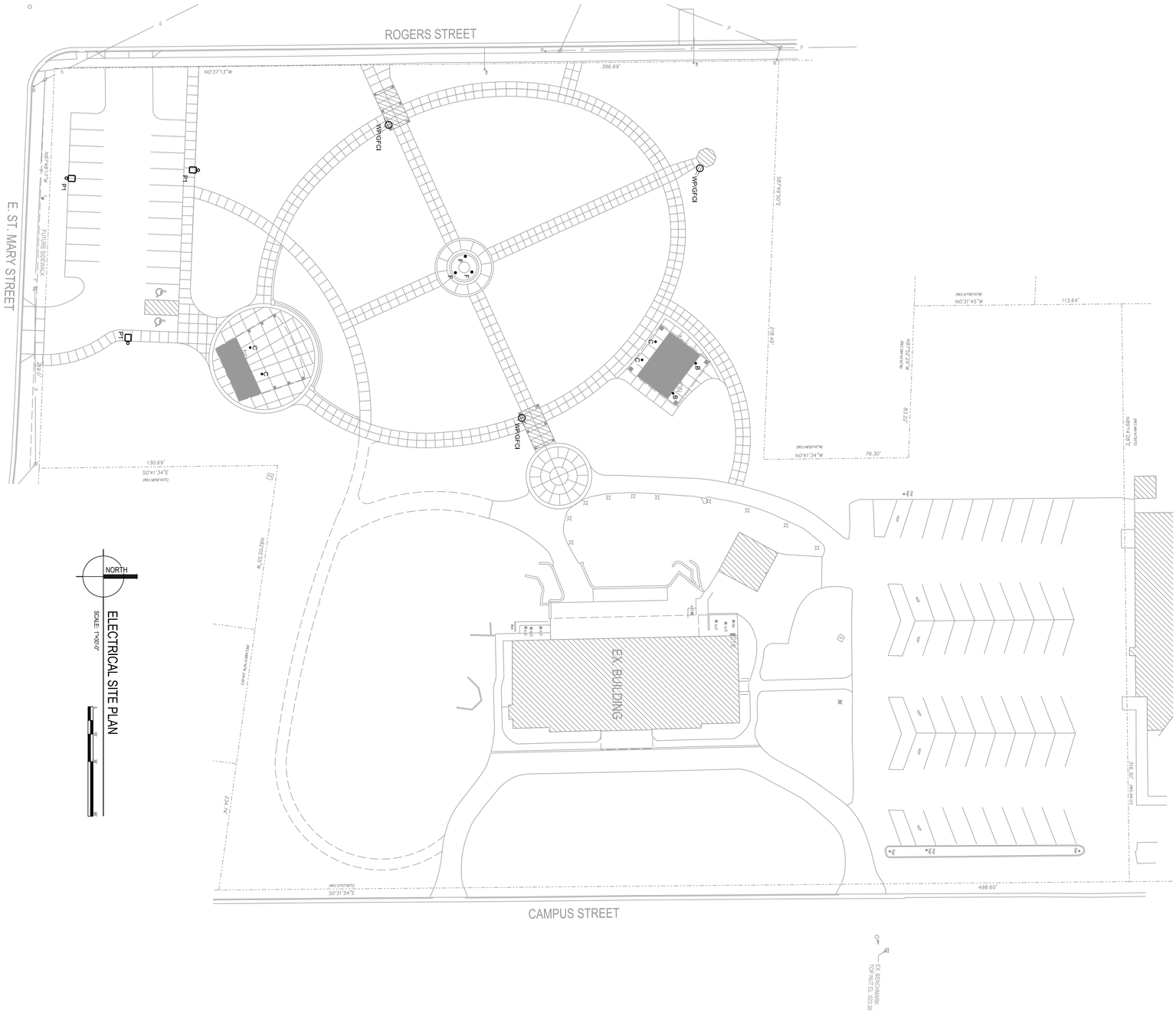

STATE REVIEW DRAWINGS / CONSTRUCTION DOCUMENTS

Due to electronic distribution, this drawing may not be printed to the scale indicated on the drawings. Do NOT use scale to determine dimensions or sizes.

Due to electronic distribution, this drawing may not be printed to the scale indicated on the drawings. Do NOT use scale to determine dimensions or sizes.

ES01

ELECTRICAL SITE PLAN

PROJECT NUMBER	67220
APPROVED BY	JJS
REVIEWED BY	JJS
DRAWN BY	KJS
6/30/2020	11:08:41 AM

NEW PAVILION AND
SITE IMPROVEMENTS
THE GATHERING PLACE
MILTON, WI

Angus Young
Balance in Creativity
Architecture
Engineering
Interior Design
555 South River Street Janesville, WI 53548-4783
Ph: 608.756.2326 Fx: 608.756.0464
www.angusyoung.com

ISSUANCES	REVISIONS
STATE BUILDING REVIEW SUBMITTAL - 06/02/2020	

Copyright © 2020 Angus-Young Associates, Inc., All Rights Reserved

Schedule						
Label	Manufacturer	Catalog Number	Description	Number Lamps	Lumens Per Lamp	Wattage
B	Lithonia Lighting	WDGE1 LED P1 35K 80CRI VF	WDGE1 LED WITH P1 - PERFORMANCE PACKAGE, 3500K, 80CRI, VISUAL COMFORT FORWARD OPTIC	1	1194	10.0002
C	Luminaire LED	SWP1212 25W 35K CLP	Catalog Number: SWP1212-25W 3500K CP White polycarbonate housing with die cast aluminum base plate, clear prismatic polycarbonate lens enclosure, 120 White LEDs (Samsung LM561B) Two Thomas Research Products LED20W-24-C0700 LED drivers 120,04Vac, 60,0Hz, 0.2482A, 29.1W, 0.975PF, 3.03%THD(I)	1	2928	29
F	EATON - LUMIERE (FORMER COOPER LIGHTING)	3002A-18LED4000-MFL-UNV-NBR	LUMIERE MONACO INGRADE TEST FIXTURE WITH MEDIUM FLOOD OPTICS	1	956	16.6
P1	EATON - McGRAW-EDISON (FORMER COOPER LIGHTING)	GLNA-AF-01-LED-E1-SL4-HSS	GALLEONAIRE AREA AND ROADWAY LUMINAIRE (1) 70 CRI, 4000K CCT 1050mA LIGHTSQUARE WITH 16 LEDS EACH AND Type IV w/Spill Control WITH HOUSESIDE SHEILD OPTICS ABSOLUTE PHOTOMETRY IS BASED ON CALIBRATION FACTORS CREATED USING LAB LUMEN STANDARDS IN GONIOPHOTOMETER WITH TEST DISTANCE OF 28.75 FEET	1	4591	59

Statistics						
Description	Symbol	Avg	Max	Min	Max/Min	Avg/Min
NEW PARKING LOT	+	1.2 fc	1.9 fc	0.3 fc	6.3:1	4.0:1
PROPERTY LINE	+	0.0 fc	0.2 fc	0.0 fc	N/A	N/A

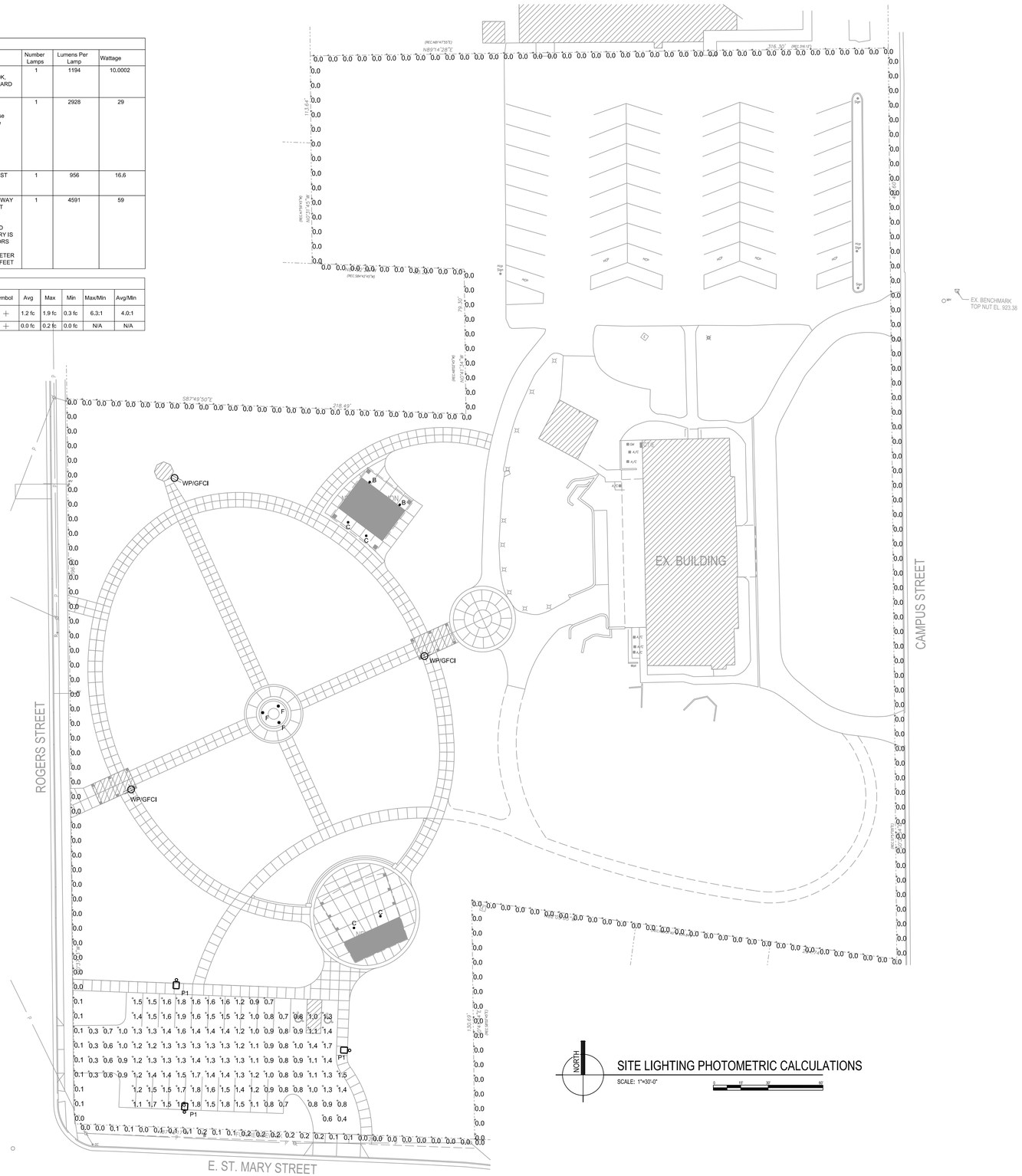

STATE REVIEW DRAWINGS / CONSTRUCTION DOCUMENTS

Due to electronic distribution, this drawing may not be printed to the scale indicated on the drawings. Do NOT use scale to determine dimensions or sizes.

REVISIONS

ISSUANCES

STATE BUILDING REVIEW SUBMITTAL - 06/02/2020

Angus Young
Architecture
Engineering
Interior Design
Balance in Creativity
555 South Bluff Street Janesville, WI 53548-4733
Ph. 608.756.3326 Fax 608.756.0464
www.angusyoung.com

Copyright © 2020 Angus-Young Associates, Inc., All Rights Reserved

NEW PAVILION AND
SITE IMPROVEMENTS
THE GATHERING PLACE
MILTON, WI

PROJECT NUMBER 07720
APPROVED BY JJS
REVIEWED BY JJS
DRAWN BY KJS
6/30/2020 11:13:05 AM

SITE LIGHTING PHOTOMETRIC CALCULATIONS

ES11

Due to electronic distribution, this drawing may not be printed to the scale indicated on the drawings. Do NOT use scale to determine dimensions or sizes.

ORIGINAL SIZE = 24" x 36"
X:\67720\acad\67720\ES11.dgn
SCALE: 1"=30'-0"
PLOTTED BY: KelinS